Engineered by Professionals for Professionals since 1910

BOILER VALVES

UNITED BRASS WORKS, INC.
714 S. Main St.
Randleman, N.C. 27317
Phone: 800/334-3035
Fax: 800/498-4696
Email: sales@ubw.com
Web: www.ubw.com

Catalog 2202

Printed in U.S.A.

CONTENTS

Terms and Conditions - Page 78

Ball Valves 1-3
Blow-Down Valves 4-9
Boiler Drains 26
Boiler Gauge Glass 27
Check Valves, Lift 15-21
Check Valves, Swing 12-14
Continuous Blow-Down Valve 10-11
Expansion Tank Fixtures, Lower 42
Expansion Tank Fixture, Upper 41
Expansion Tank Fixture Sets 43
Float Balls 30-31
Float Valves 28-29
Float Valve Rods 32
Flat Panel Gauge Sets 71-77
Gauge Fixtures, Lower 49-53
Gauge Fixtures, Upper 44-48
Gauge Fixture Sets 54-70
Globe Valves 33-34
Safety Relief Valves 37
Strainers, Sediment 22-25
Syphons 38-40
Tricocks 35-36

NOTE: Steam Pressure Ratings on Valves are for Body and Components excluding discs. If Valve is equipped with a Rubber Disc, it will not withstand steam temperature.

PRESSURE TEMPERATURE RATINGS

The Pressure-Temperature ratings listed below were developed by the Manufacturers Standardization Society of the Valve and Fittings Industry, commonly referred to as MSS.

PRESSURE TEMPERATURE RATINGS - Non-Shock for Bronze Valve (MSS Standard Practice SP-80)

Pressure Class	125	150	200 (3)	200	300	
End Conn.	Thd	Thd	Thd	Thd	Thd*	Thd

Note (1)
Pressure-Temperature ratings on Solder-Joint Pipe Systems is dependent not only on valve, fitting and tubing strength, but also on the composition of the solder used for joints. The user is responsible for selecting a solder composition that is compatible with the service conditions.

Note (2)
Pressure-Temperature ratings for valves fitted with non-metallic (composition) discs is dependent upon the composition of the disc material.

Note (3)
ASTM-B62 (Alloy 836) can be used to these pressures if temperature is limited to 406 F.

* With Union Bonnet

	MATERIAL					
	PRESSURE - PSI					
Temp. Deg. F.	ASTM B-62 Alloy No. 836			ASTM B-61 Alloy No. 992		
-20 to 150	200	300	400	400	1000	600
200	185	270	375	375	920	560
250	170	240	350	350	830	525
300	155	210	325	325	740	490
350	140	180	300	300	650	450
400	--	B	275	275	560	410
406	125	150	260	--	--	--
450	120	145	--	250	480	375
500	--	--	--	225	390	340
550	--	--	--	200	300	300

Alloy ASTM B584 (Alloy 844) valve are limited to pressures marked on valve bodies and no more than 350 F.

UNITED BRASS WORKS, INC

714 S. Main St.. Randleman, N.C. 27317

Phone: 800/334-3035 Fax: 800/498-4696

Model 80 Ball Valve

Double Female

(Complies with MSS-SP110-92)

200 lbs. WSP @ 406 ° Max

400 lbs. WOG * 100% Pressure Tested

Threaded Ends * Blowout Proof Stem

1/4" – 1/2" Full Flow

3/4" - 2" Large Port Diameters

CRN OCO7135.2

Complies with ASME B31.1

Contains Lead. Not Intended for Use in Potable Water Systems

MATERIAL LIST

NO.	DESCRIPTION	MATERIAL
1	Lever	Plated Steel w/ vinyl grip
2	Stem	Brass
3	Jam Nut	Plated Steel
4	Packing Nut	Brass
5	Packing Sleeve	Brass
6	Packing	Graphite Non-Asb.
7	Bevel Washer	Steel
8	O-Ring	Buna
9	Tail Piece (¼" – ½") Tail Piece (3/4" - 2")	Brass Bronze
10	Body	Bronze
11	Ball	Chrome Plated Brass
12	Nest	PTFE

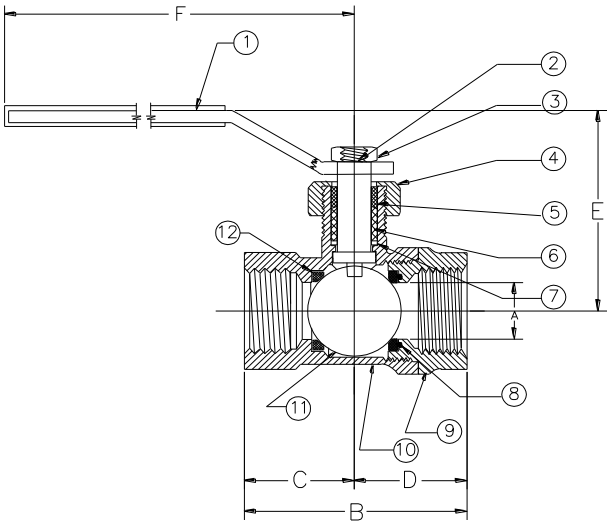

SIZE	A	B	C	D	E	F	SHIP WT. (lbs.)	QUAN. PER CTN.
¼"	0.38	1.86	0.92	0.94	1.58	3.31	0.52	12
3/8"	0.38	1.86	0.92	0.94	1.58	3.31	0.52	12
½"	0.50	2.17	1.06	1.11	2.28	4.23	0.78	12
¾"	0.63	2.05	1.20	1.31	2.38	4.23	0.98	12
1"	0.81	3 .27	1.67	1.59	2.55	4.23	1.59	6
1 ¼"	1.00	3.48	1.72	1.77	3.19	5.47	2.47	4
1 ½"	1.25	3.97	1.95	2.02	3.38	5.47	3.50	4
2"	1.50	4.41	2.14	2.27	3.56	5.47	5.00	2

UNITED BRASS WORKS, INC

714 S. Main St.. Randleman, N.C. 27317

Phone: 800/

334-3035 Fax: 800/498-4696

Model 80MXF Ball Valve

Male x Female

(Complies with MSS-SP110-92)

200 lbs. WSP @ 406 ° Max

400 lbs. WOG

100% Pressure Tested

Blow-Out Proof Stem

1/4" – 1/2" Full Flow

3/4" - 2" Large Port Diameters

CRN OCO7135.2

Complies with ASME B31.1

Contains Lead. Not Intended for Use in Potable Water Systems

MATERIAL LIST

NO.	DESCRIPTION	MATERIAL
1	Lever	Plated Steel w/ vinyl grip
2	Stem	Brass
3	Jam Nut	Plated Steel
4	Packing Nut	Brass
5	Packing Sleeve	Brass
6	Packing	Graphite Non-Asb.
7	Bevel Washer	Steel
8	O-Ring	Nitrile Buna-N
9	Tail Piece (¼" – ½") Tail Piece (3/4" - 2")	Brass Bronze
10	Body	Bronze
11	Ball	Chrome Plated Brass
12	Nest	PTFE

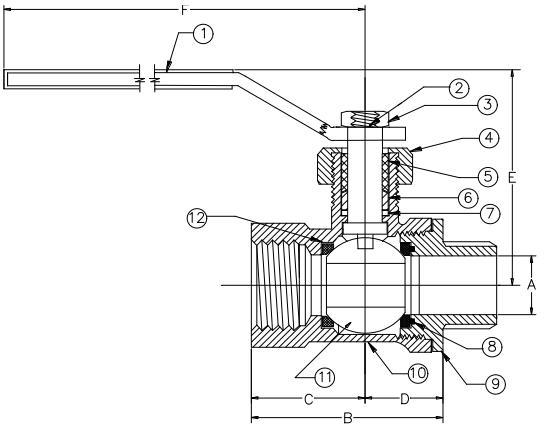

SIZE	A	B	C	D	E	F	SHIP WT. (lbs.)	QUAN. PER CTN.
¼"	0.38	1.86	0.92	0.94	1.55	3.31	0.52	12
3/8"	0.38	1.86	0.92	0.94	1.55	3.31	0.52	12
½"	0.50	2.17	1.06	1.11	2.28	4.23	0.78	12
¾"	0.63	2.52	1.20	1.3	2.35	4.23	0.98	12
1"	0.81	3.27	1.67	1.59	2.55	4.23	1.59	6
1 ¼"	1.00	3.48	1.72	1.77	3.19	5.47	2.47	4
1 ½"	1.25	3.97	7.95	2.02	3.38	5.47	3.50	4
2"	1.50	4.41	2.14	2.27	3.56	5.47	5.00	2

UNITED BRASS WORKS, INC

714 S. Main St.. Randleman, N.C. 27317

Phone: 800/334-3035 Fax: 800/498-4696

Model 80SS Ball Valve

Double Female

(Complies with MSS-SP110-92)

200 lbs. WSP @ 406 ° Max

400 lbs. WOG * 100% Pressure Tested

Threaded Ends * Blowout Proof Stem

¼" - ½" Full Flow

¾" - 2" Large Port Diameters

CRN OCO7135.2

Complies with ASME B31.1

Contains Lead. Not Intended for Use in Potable Water Systems

MATERIAL LIST

NO.	DESCRIPTION	MATERIAL
1	Lever	Plated Steel w/ vinyl grip
2	Stem	Brass
3	Jam Nut	Plated Steel
4	Packing Nut	Brass
5	Packing Sleeve	Brass
6	Packing	Graphite Non-Asb.
7	Bevel Washer	Steel
8	O-Ring	Buna
9	Tail Piece (¼" – ½") Tail Piece (3/4" - 2")	Brass Bronze
10	Body	Bronze
11	Ball	Stainless Steel
12	Nest	PTFE

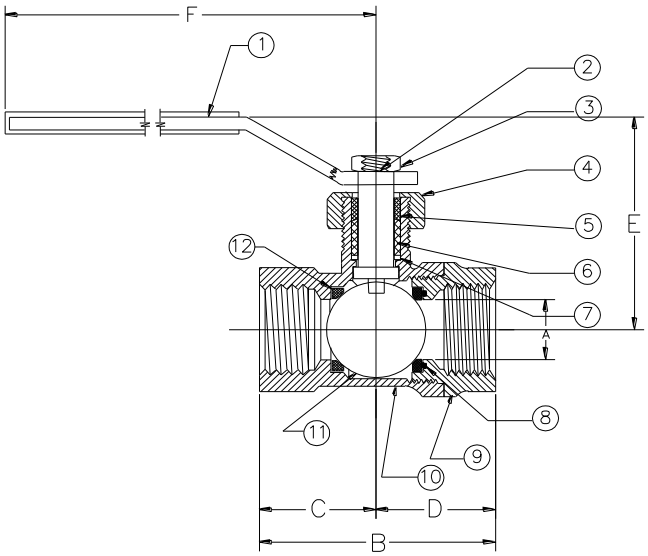

SIZE	A	B	C	D	E	F	SHIP WT. (lbs.)	QUAN. PER CTN.
¼"	0.38	1.86	0.92	0.94	1.58	3.31	0.52	12
3/8"	0.38	1.86	0.92	0.94	1.58	3.31	0.52	12
½"	0.50	2.17	1.06	1.11	2.28	4.23	0.78	12
¾"	0.63	2.05	1.20	1.31	2.38	4.23	0.98	12
1"	0.81	3 .27	1.67	1.59	2.55	4.23	1.59	6
1 ¼"	1.00	3.48	1.72	1.77	3.19	5.47	2.47	4
1 ½"	1.25	3.97	1.95	2.02	3.38	5.47	3.50	4
2"	1.50	4.41	2.14	2.27	3.56	5.47	5.00	2

UNITED BRASS WORKS, INC.

714 S. Main St. Randleman, N.C. 27317

Tel: 800-334-3035 Fax: 800-498-4696 www.ubw.com

Model 226UT "Y" Blow-Off Valve

Complies with MSS-SP-80-2013

CRN OCO7135.2

200 WSP @ 406° Max • 400 WOG

Non-Shock Service • 100% Pressure Tested

Threaded Ends • Rising Stem • Swivel Disc Holder

PTFE Disc • Integral Seat • Max Pressure for Boiler Blow-Off 160 PSI

Contains Lead. Not Intended for Use in Potable Water Systems

Care must be taken in blow down piping so that no water hammer effect causes shock to the "Y" blow down valve, especially in cases where a boiler has two blow down lines. In such cases both lines should be piped to a common set of blow down valves or each blow off line should be piped separately to the blow down separator. Excessive water hammer or shock can destroy valves and piping and could cause injury.

MATERIAL LIST

NO.	DESCRIPTION	MATERIAL
1	Jam Nut	Steel
2	Hand Wheel	Ductile Iron
3	Stem	Naval Brass
4	Packing Nut	Brass
5	Packing Gland	Brass
6	Packing	NAFG
7	Bonnet	Bronze
8	Bonnet Nut	Bronze
9	Lock Nut	Brass
10	Disc Holder	Brass
11	Body	Bronze
12	Marker Disc	Aluminum

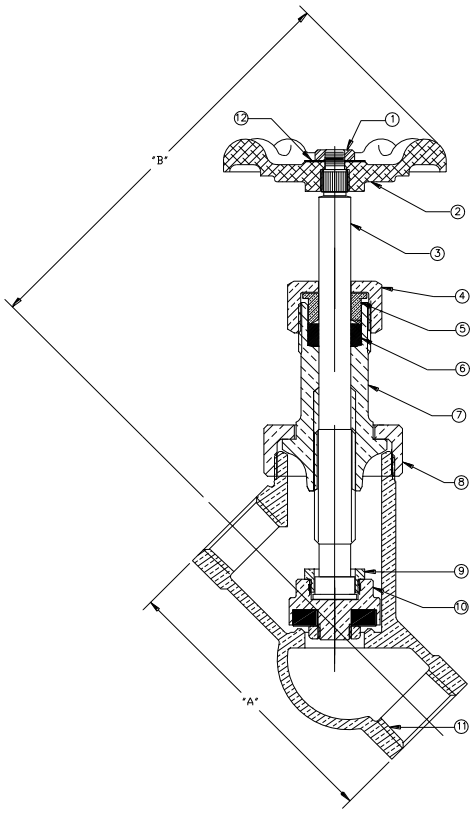

Size	1"	1 ¼"	1 ½"	2"
A	4.75	5.56	6.25	7.75
B	5.75	7.00	7.75	8.75
Ship Wt. (lbs.)	4.20	6.10	9.00	15.00
Qty. Unit Pack	4	4	2	2

UNITED BRASS WORKS, INC.
714 S. Main St. Randleman, N.C. 27317
Tel: 800-334-3035 Fax: 800-498-4696 www.ubw.com

Model 325U "Y" Blow-Off Valve

Complies with MSS-SP-80-2013
CRN OCO7135.2

Class 300 • Non-Shock Service
100% Pressure Tested • Threaded Ends
Rising Stem • Swivel Disc Holder
Seat & Disc 400-500 *Brinnell* Stainless Steel
Max Pressure 390 PSI @ 500° F • Max Pressure for Boiler Blow-Off 312 PSI
Contains Lead. Not Intended for Use in Potable Water Systems

Care must be taken in blow down piping so that no water hammer effect causes shock to the "Y" blow down valve, especially in cases where a boiler has two blow-down lines. In such cases both lines should be piped to a common set of blow down valves or each blow off line should be piped separately to the blow down separator. Excessive water hammer or shock can destroy valves and piping and could cause injury.

MATERIAL LIST

NO.	DESCRIPTION	MATERIAL
1	Jam Nut	Steel
2	Hand Wheel	Ductile Iron
3	Stem	Naval Brass
4	Packing Nut	Brass
5	Packing Gland	Brass
6	Packing	NAFG
7	Bonnet	Bronze
8	Bonnet Nut	Bronze
9	Lock Nut	Brass
10	Disc	Stainless Steel
11	Body	Bronze
12	Seat	Stainless Steel

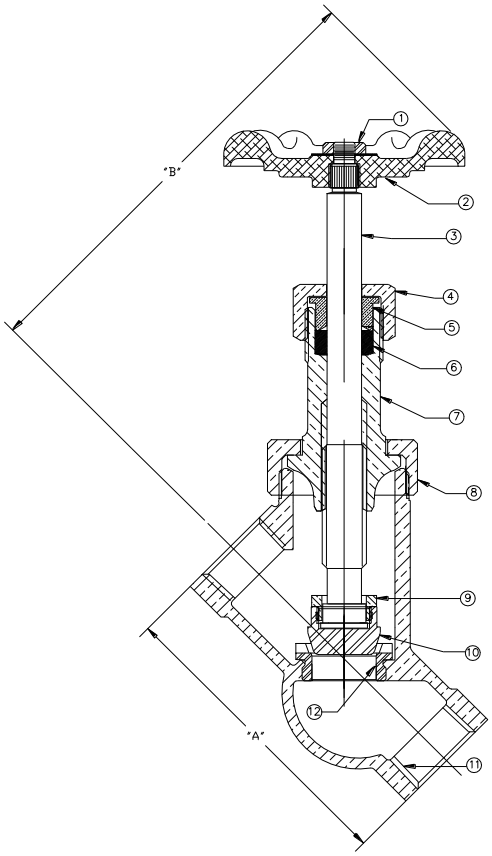

Size	1"	1 ¼"	1 ½"	2"
A	4.75	5.56	6.25	7.75
B	5.75	7.00	7.75	8.75
Ship Wt. (lbs.)	4.75	6.25	8.60	15.11
Qty. Unit Pack	4	4	2	2

UNITED BRASS WORKS, INC.

714 S. Main St., Randleman, NC 27317

Tel: 800-334-3035 Fax: 800-498-4696 www.ubw.com

Model 425 Quick Opening Blow-Off Valve

Class 300 * ANSI B 16.34 * 600 psi Working Steam Pressure @ 500 F 740 psi @ 100 F * 100% Pressure Tested * Threaded Ends * Epoxy Coated (E-Coat) Max Pressure for Boiler Blow Off 480 PSI

CRN OCO7135.2, 24, 25, 26

CRN OEO2171.7, 79, 70, 78, 7AY, 7T, 7N

The United Brass quick opening boiler blow off valve has been designed for the rugged service of boiler treatment and scale. The cast steel knife gate valve conforms to Class 300 of ANSI B16.34 and features a stainless steel seat and disc hardened to Rockwell 60. ASME Boiler and Pressure Vessel Code Section 1 PG-42.1.12 and Power Piping Code ASME B 31.1 Table 126.1 reference steel valves to ANSI B 16.34. The sliding disc provides a "cleaning" action that keeps the seating area clear of scale and debris.

DESCRIPTION	MATERIAL
Body	Steel A216 WCC
Cover	Steel A216 WCC
Gasket	Tanged Graphite
Disc Spring	17-7 Stainless Steel
Disc Rivet	Carbon Steel
Disc	440C Stainless Steel
Arm	Steel A216 WCC
Stem	410 Stainless Steel
Stem Rivet	Carbon Steel
Stem Spring	17-7 Stainless Steel
Packing	Graphite
Packing Nut	410 Stainless Steel
Handle (1" & 1 1/4")	Ductile Iron 65-45-12
Handle (1 1/2" & 2")	Steel A216 WCC
Cotter Pin	Plated Steel
Body Bolts	Steel Grade 8
Hex Nuts	Steel Grade 8
Name Plate	Stainless Steel
Drive Screws	Stainless Steel

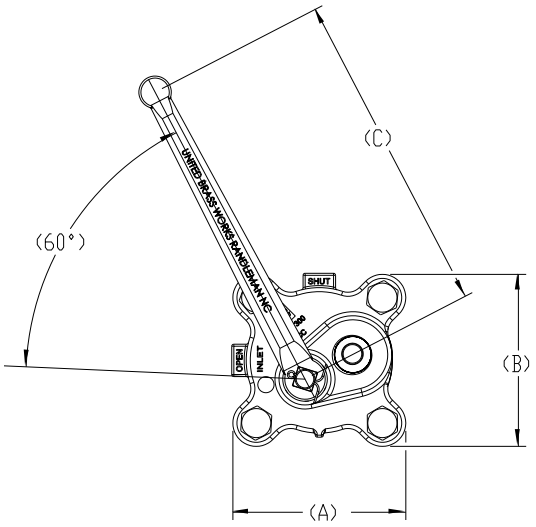

Size	1	1 ¼"	1 ½"	2"
A	5.32	5.32	8.20	10.50
B	5.32	5.32	8.20	10.50
C	10.00	10.00	12.50	18.00
D	60º	60º	60º	60º
Face to Face	3.80	3.80	4.50	4.80
Weight	14.0	14.0	36.0	46.0

UNITED BRASS WORKS, INC

714 S. Main St.. Randleman, N.C. 27317

Phone: 800/334-3035 Fax: 800/498-4696 www.ubw.com

Model 525 Slow Opening Blow-Off Valve

Class 300 * ANSI B 16.34 * 600 psi Working Steam Pressure @ 500 F
740 psi @ 100 F * 100% Pressure Tested * Threaded Ends * Epoxy Coated (E-Coat)
Max Pressure for Boiler Blow off 480 PSI
CRN OCO7135.2, 24, 25, 26
CRN OEO2171.7, 79, 70, 78, 7AY, 7T, 7N

The United Brass slow opening boiler blow off valve has been designed for the rugged service of boiler treatment and scale. The cast steel knife gate valve conforms to Class 300 of ANSI B16.34 and features a stainless steel seat and disc hardened to Rockwell 60. ASME Boiler and Pressure Vessel Code Section 1 PG-42.1.12 and Power Piping Code ASME B 31.1 Table 126.1 reference steel valves to ANSI B 16.34. The sliding disc provides a "cleaning" action that keeps the seating area clear of scale and debris.

DESCRIPTION	MATERIAL
Body	Steel A216 WCC
Cover	Steel A216 WCC
Gasket	Tanged Graphite
Disc Spring	17-7 Stainless Steel
Disc Rivet	Carbon Steel
Disc	440C Stainless Steel
Arm	Steel A216 WCC
Stem	410 Stainless Steel
Stem Rivet	Carbon Steel
Stem Spring	17-7 Stainless Steel
Packing	Graphite
Packing Nut	410 Stainless Steel
Handle (1" & 1 1/4")	Ductile Iron 65-45-12
Handle (1 1/2" & 2")	Steel A216 WCC
Cotter Pin	Plated Steel
Body Bolts	Steel Grade 8
Hex Nuts	Steel Grade 8
Name Plate	Stainless Steel
Drive Screws	Stainless Steel
Operating Assembly	Bronze

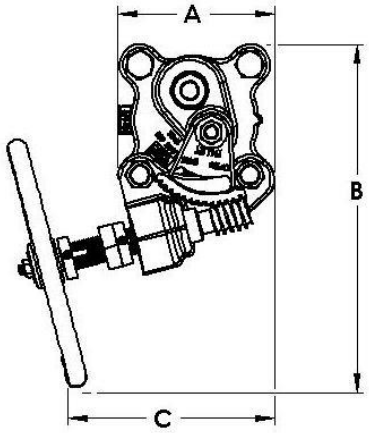

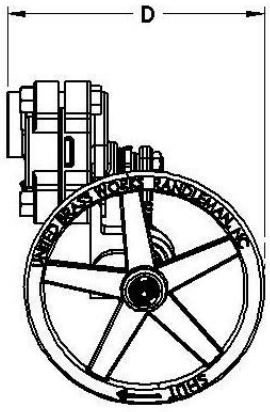

Size	1	1 ¼"	1 ½"	2"
A	5.50	5.50	7.80	9.20
B	12.30	12.30	14.30	14.90
C	9.50	9.50	10.60	16.00
D	9.60	9.60	10.20	11.50
Weight	26.0	26.0	40.0	68.0

UNITED BRASS WORKS, INC

714 S. Main St.. Randleman, N.C. 27317

Phone: 800/334-3035 Fax: 800/498-4696 www.ubw.com

Model 625 Quick Opening Flanged Blow-Off Valve

Class 300 * ANSI B 16.34 * 600 psi Working Steam Pressure @ 500 F
740 psi @ 100 F * 100% Pressure Tested * Epoxy Coated (E-Coat)

Max Pressure for Boiler Blow Off 480 PSI

CRN OCO7135.2, 24, 25, 26

CRN OEO2171.7, 79, 70, 78, 7AY, 7T, 7N

The United Brass quick opening flanged boiler blow off valve has been designed for the rugged service of boiler treatment and scale. The cast steel knife gate valve conforms to Class 300 of ANSI B16.34 and features a stainless steel seat and disc hardened to Rockwell 60. ASME Boiler and Pressure Vessel Code Section 1 PG-42.1.12 and Power Piping Code ASME B 31.1 Table 126.1 reference steel valves to ANSI B 16.34. The sliding disc provides a "cleaning" action that keeps the seating area clear of scale and debris.

ITEM	DESCRIPTION	MATERIAL	QUANTITY
1	Stem	410 Stainless Steel	1
2	Packing	Graphite	1
3	Packing Nut	410 Stainless Steel	1
4	Stem Spring	17-7 Stainless Steel	1
5	Stem Rivet	Carbon Steel	1
6	Disc Arm	ASTM A216 WCC	1
7	Disc Spring	17-7 Stainless Steel	1
8	Disc Rivet	Carbon Steel	1
9	Gate Disc	440C Stainless Steel	1
10	Gasket	Tanged Graphite	1
11	Hex Nut	Grade 8	4 (1"-11/4") 5 (11/2") 6 (2")
12	Handle	Ductile Iron	1
13	Washer	Stainless Steel	1
14	Jam Nut	Stainless Steel	1
15	Hex Bolt	Grade 8	4 (1"-11/4") 5 (11/2") 6 (2")
16	Lock Washer	Grade 8	4 (1"-11/4") 5 (11/2") 6 (2")
17	Cover	ASTM A216 WCC	1
18	Body	ASTM A216 WCC	1

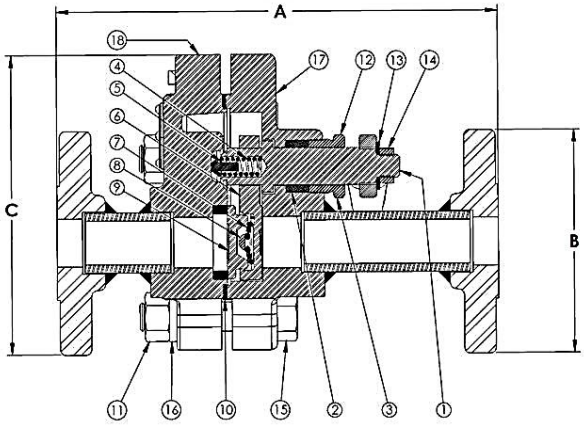

SIZE	1"	1 1/4"	1 1/2"	2"
A	9.70	9.70	10.90	12.60
B	4.90	4.90	6.10	6.50
C	6.6 0	6.60	8.00	9.80
D	2.50	2.50	3.20	1.9 0
B.C.	3.50	3.50	4.50	6.50
BOLT HOLES	4	4	4	8
Unit Wgt.	22.80	25.20	41.20	60.20

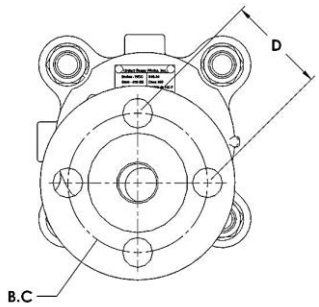

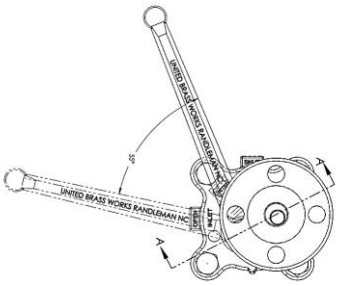

UNITED BRASS WORKS, INC.
714 S. Main St. Randleman, N.C. 27317
Tel: 800-334-3035 Fax: 800-498-4696 www.ubw.com

Model 725 Slow Opening Flanged Blow-Off Valve

Class 300 * ANSI B 16.34 * 600 psi Working Steam Pressure @ 500 F
740 psi @ 100 F * 100% Pressure Tested * Epoxy Coated (E-Coat)

Max Pressure for Boiler Blow Off 480 PSI
CRN OCO7135.2, 24, 25, 26
CRN OEO2171.7, 79, 70, 78, 7AY, 7T, 7N

The United Brass slow opening flanged boiler blow off valve has been designed for the rugged service of boiler treatment and scale. The cast steel knife gate valve conforms to Class 300 of ANSI B16.34 and features a stainless steel seat and disc hardened to Rockwell 60. ASME Boiler and Pressure Vessel Code Section 1 PG-42.1.12 and Power Piping Code ASME B 31.1 Table 126.1 reference steel valves to ANSI B 16.34. The sliding disc provides a "cleaning" action that keeps the seating area clear of scale and debris.

	MATERIAL LIST					
NO.	DESCRIPTION	MATERIAL		NO.	DESCRIPTION	MATERIAL
1	Knife Gate Cover	Carbon Steel		19	Washer	Stainless Steel
2	Knife Gate Body	Carbon Steel		20	Jam Nut	Stainless Steel
3	Knife Gate Stem	Stainless Steel		21	Name Plate	Steel
4	Knife Gate Packing	Graphite		22	Drive Screw	Stainless Steel
5	Knife Gate Packing Nut	Stainless Steel		23	Worm Gear	Bronze
6	Knife Gate Stem Spring	Stainless Steel		24	Bracket	Bronze
7	Stem Rivet	Carbon Steel		25	Worm Steam	Bronze
8	Knife Gate Arm	Carbon Steel		26	Bearing	Bronze
9	Disc Spring	Stainless Steel		27	Retaining Ring	Steel
10	Disc Rivet	Carbon Steel		28	Open/Close Collar	Bronze
11	Knife Gate Disc	Stainless Steel		29	Collar Bearing	Bronze
12	Knife Gate Gasket	Graphite		30	Open/Close Yoke	Bronze
13	Bolt	Steel Grade 8		31	Set Screw	Stainless Steel
14	Lock Washer	Steel Grade 8		32	Yoke Pin	Stainless Steel
15	Hex Nut	Steel Grade 8		33	2" Hand Wheel	Ductile Iron
16	Hex Bolt	Steel Grade 8		34	Washer	Brass
17	Washer	Stainless Steel		35	Marker Disc	Aluminum
18	Jam Nut	Steel		36	Nut	Stainless Steel

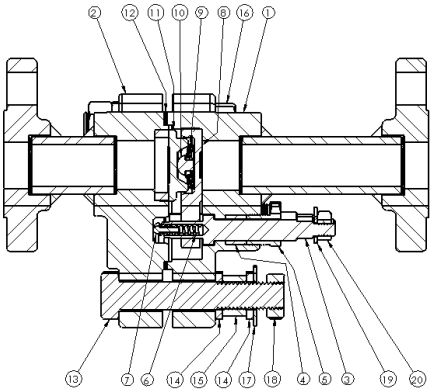

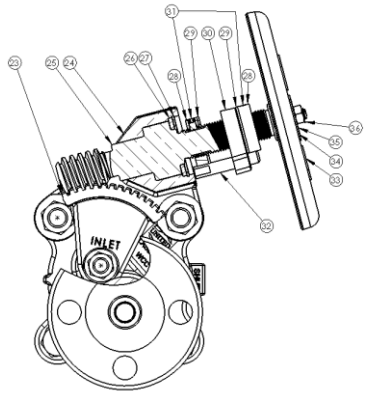

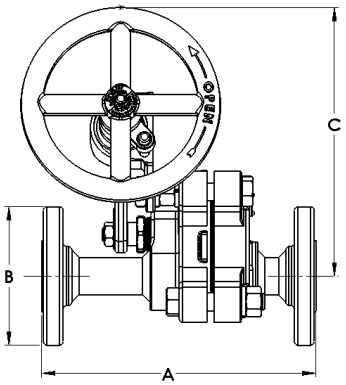

Size	1"	11/4"	11/2"	2"
A	9.70	9.70	10.90	12.60
B	4.90	4.90	6.10	6.50
C	8.10	8.10	8.60	9.20
B.C.	3.50	3.50	4.50	6.50
Bolt Holes	4	4	4	8
Unit Wgt.	27.4	27.8	44.5	65.4

UNITED BRASS WORKS, INC

714 S. Main St.. Randleman, N.C. 27317

Phone: 800/334-3035 Fax: 800/498-4696 www.ubw.com

Model 363 Continuous Blow-Down Needle Valve

Complies with MSS-SP -80-2013

Class 300 • 100% Pressure Tested
Globe Pattern • Threaded Ends
Rising Stem with Swivel Disc Holder
Calibrated "Easy to Read" Gauge with Pointer
Stainless Steel Seat & Disc Hardened to 60 Rockwell "C"
Max Pressure 390 PSI @ 500° F • Max. Pressure for Boiler Blow-Down 312 PSI
CRN OCO7135.2C

MATERIAL LIST		
NO.	DESCRIPTION	MATERIAL
1	Body	Bronze
2	Bonnet	Bronze
3	Stem	Bronze
4	Valve Meter	Stainless
5	Meter Nut	Brass
6	Seat Ring	Stainless
7	Yoke	Bronze
8	Union Nut	Bronze
9	Gage Collar	Brass
10	Packing Nut	Brass
11	Packing Gland	Brass
12	Packing	NAFG
13	Hand Wheel	Zinc
14	E-Clip	Stainless
15	Set Screw	Stainless
16	Hex Nut	Stainless
17	Set Screw	Stainless

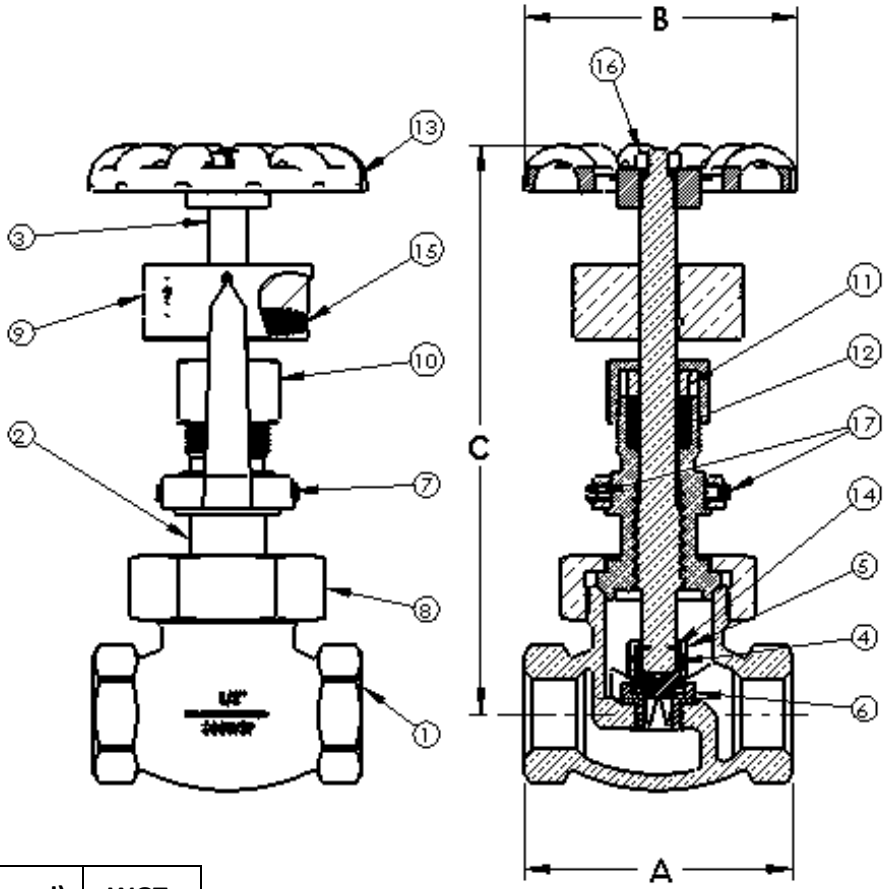

SIZE	A	B	C (Open)	C (Closed)	WGT.
1/2"	2.68	2.75	6.0	5.7	2.55
3/4"	3.10	2.75	6.6	6.3	3.25

UNITED BRASS WORKS, INC

714 S. Main St.. Randleman, N.C. 27317

Phone: 800/334-3035 Fax: 800/498-4696 www.ubw.com

Model 364 Continuous Blow-Down Needle Valve

Complies with MSS-SP -80-2013

Class 300 • 100% Pressure Tested
Angle Pattern • Threaded Ends
Rising Stem with Swivel Disc Holder
Calibrated "Easy to Read" Gauge with Pointer
Stainless Steel Seat & Disc Hardened to 60 Rockwell "C"
Max Pressure 390 PSI @ 500° F • Max Pressure for Boiler Blow-Down 312 PSI

CRN OCO7135.2C

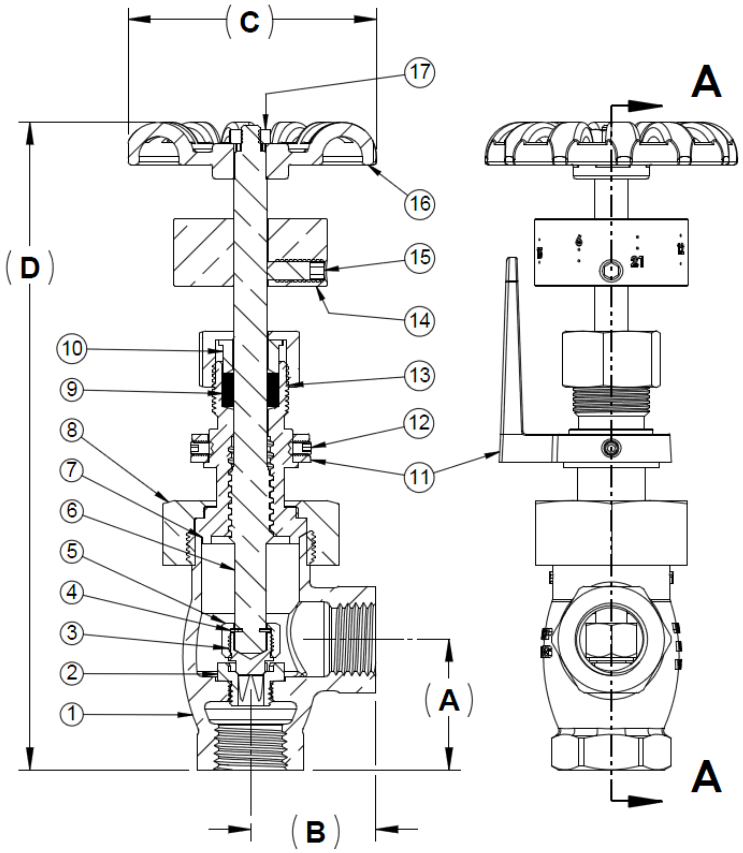

MATERIAL LIST		
NO.	**DESCRIPTION**	**MATERIAL**
1	Body	Bronze
2	Seat Ring	Stainless Steel
3	Valve Meter	Stainless Steel
4	E-Clip	Stainless Steel
5	Meter Nut	Brass
6	Stem	Brass
7	Bonnet	Brass
8	Bonnet Nut	Bronze
9	Packing	NAFG
10	Packing Gland	Brass
11	Gage Collar	Brass
12	Set Screw	Stainless Steel
13	Packing Nut	Brass
14	Gage Collar	Brass
15	Set Screw	Stainless Steel
16	Hand Wheel	Ductile Iron
17	Hex Nut	Stainless

SIZE	A	B	C	D (OPEN)	D (CLOSED)	WGT.
1/2"	1.45	1.40	2.80	7.48	7.10	2.75
3/4"	1.65	1.44	2.80	7.78	8.15	3.50

UNITED BRASS WORKS, INC.
714 S. Main St. Randleman, N.C. 27317
Tel: 800-334-3035 Fax: 800-498-4696 www.ubw.com

Model 62 Swing Check Valve

Complies with MSS-SP-80-2013
CRN OCO7135.2C
200WSP @ 406° Max
400 WOG
100% Pressure Tested
Threaded Ends
Contains Lead. Not Intended for Use in Potable Water Systems

Install in horizontal position with cap in upright position. Not recommended for pulsating or vibrating service.

When used on Boiler feed line it is recommended that a #50T spring loaded check valve be used in conjunction with #62 with the #62 located nearest to the boiler and the #50T located nearest to the pump.

MATERIAL LIST

NO.	DESCRIPTION	MATERIAL
1	Cap (¼" – ¾") Cap (1" – 3")	Brass Bronze
2	Hinge Pin	Brass
3	Hinge	Stainless Steel
4	Body	Bronze
5	Disc	Bronze
6	Disc Nut	Brass

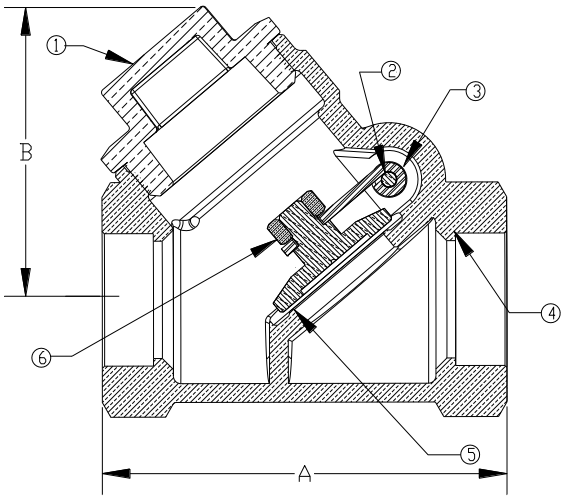

Size	¼"	3/8"	½"	¾"	1"	1 ¼"	1 ½"	2"	3"
A	2.38	2.53	2.66	3.09	3.53	5.13	5.13	5.56	9.13
B	1.53	1.53	1.53	1.88	2.09	3.63	3.63	4.56	5.58
Ship Wgt. (lbs.)	0.75	0.81	0.76	1.19	1.73	5.75	5.75	10.00	29.00
Qty. Per Ctn.	12	12	12	12	6	2	2	1	1

UNITED BRASS WORKS, INC.
714 S. Main St. Randleman, N.C. 27317
Tel: 800-334-3035 Fax: 800-498-4696 www.ubw.com

Model 62T Swing Check Valve

Complies with MSS-SP-80-2013
CRN OCO7135.2C
200WSP @ 406° Max
400 WOG
100% Pressure Tested
Threaded Ends
PTFE Disc
Contains Lead. Not Intended for Use in Potable Water Systems

Install in horizontal position with cap in upright position. Not recommended for pulsating or vibrating service.

MATERIAL LIST

NO.	DESCRIPTION	MATERIAL
1	Cap (¼" – ¾") Cap (1" – 3"	Brass Bronze
2	Hinge Pin	Brass
3	Hinge	Stainless steel
4	Disc	Bronze
5	Disc	PTFE
6	Washer	Brass
7	Screw	Brass
8	Body	Bronze
9	Disc Nut	Brass

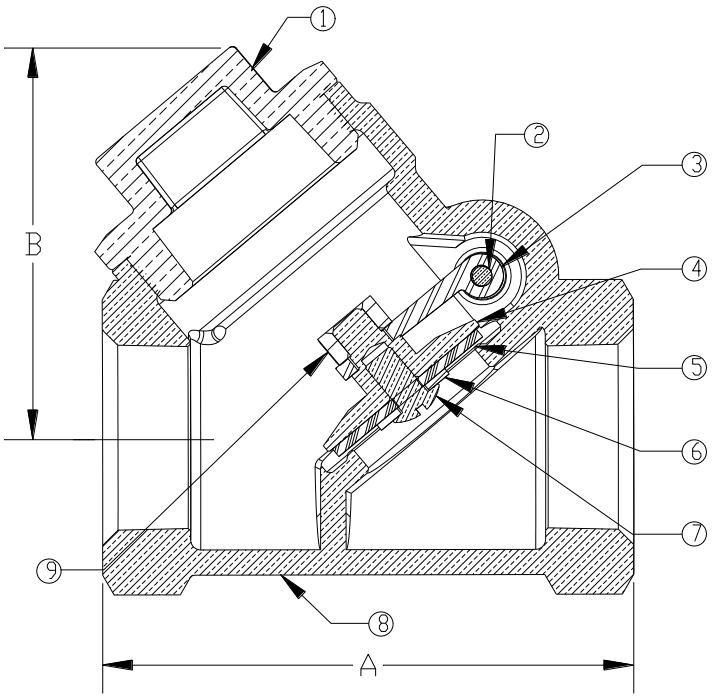

Size	¼"	3/8"	½"	¾"	1"	1 ¼"	1 ½"	2"
A	3.38	2.53	2.66	3.09	3.53	5.13	5.13	5.56
B	1.51	1.53	1.53	1.88	2.09	3.63	3.63	4.56
Ship Wgt. (lbs.)	0.75	0.81	0.76	1.19	1.73	5.75	5.75	10.00
Qty. Per Ctn.	12	12	12	12	6	2	2	1

UNITED BRASS WORKS, INC.
714 S. Main St. Randleman, N.C. 27317
Tel: 800-334-3035 Fax: 800-498-4696 www.ubw.com

Model 63 Swing Check Valve

Complies with MSS-SP-80-2013
CRN 0C07135.2C
300 WSP
600 WOG
100% Pressure Tested
Threaded Ends

Contains lead. Not Intended for Use in Potable Water Systems

Install in horizontal position with cap in upright position. Not recommended for pulsating or vibrating service.

MATERIAL LIST

NO.	DESCRIPTION	MATERIAL
1	Cap (½ – ¾“) Cap (1” – 3”)	Brass Bronze
2	Disc Nut	Bronze
3	Hinge Pin	Brass
4	Body	Bronze
5	Hinge	Stainless Steel
6	Disc	Bronze

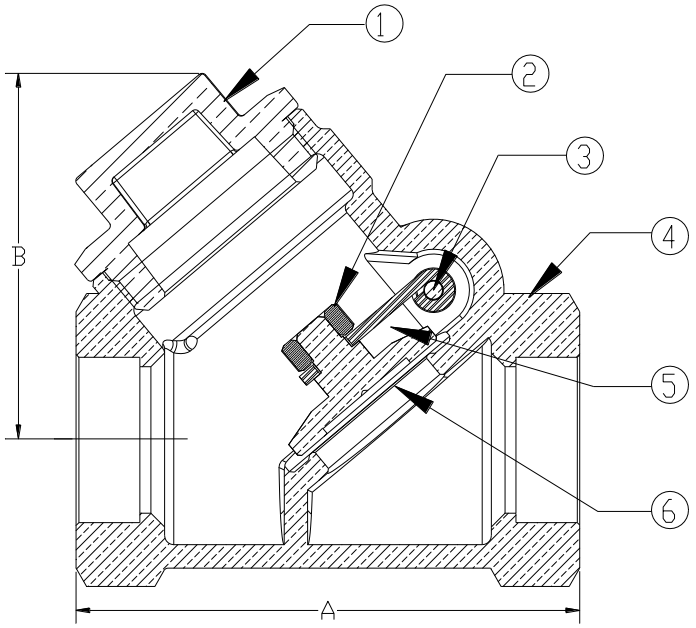

Size	½”	¾”	1”	1 ¼”	1 ½”	2”	3”
A	2.66	3.09	3.53	5.13	5.13	5.56	9.13
B	1.53	1.88	2.09	3.63	3.63	4.56	5.58
Ship Wgt. (lbs.)	0.76	1.19	1.73	5.75	5.75	10.00	29.00
Qty. Per Ctn.	12	12	6	2	2	1	1

UNITED BRASS WORKS, INC.
714 S. Main St. Randleman, N.C. 27317
Tel: 800-334-3035 Fax: 800-498-4696 www.ubw.com

Model 50 Check Valve

Spring Loaded Lift Check
Complies with MSS-SP-80-2013
400 WOG @ 180 ° Max
100% Pressure Tested
Threaded Ends · Soft Disc
Integral Seat
Equipped with 24S Soft Disc for Water Service

Not recommend for steam service
****Contains Lead. Not For Use in Water Systems***
Intended for Human Consumption*

MATERIAL LIST

NO.	DESCRIPTION	MATERIAL
1	Bonnet Nut (1/4" – 3/8") Bonnet Nut (1/2" – 2")	Brass Bronze
2	Disc Holder (1/4" -3/4") Disc Holder (1" – 2")	Brass Bronze
3	Soft Disc	Buna
4	Disc Holder Nut (1/4" – 11/4") Disc Holder Nut (11/2" – 2")	Brass Bronze
5	Body	Bronze
6	Spring	Stainless Steel
7	Guide (1/4" – 3/4") Guide (1" – 2")	Brass Bronze

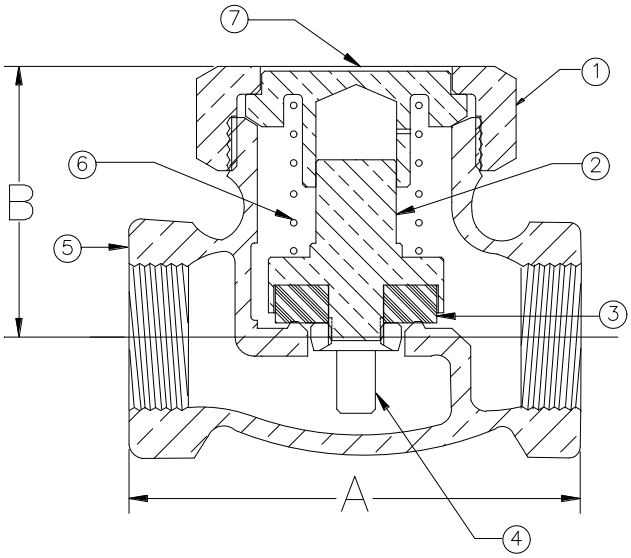

Size	1/4"	3/8"	1/2"	3/4"	1"	1 1/4"	1 1/2"	2"
A	2.19	2.36	2.59	3.17	3.75	4.28	4.78	5.88
B	1.19	1.50	1.88	1.81	2.06	2.38	2.63	3.25
Ship Wgt. (lbs.)	0.56	0.75	1.03	1.61	2.44	3.84	5.20	9.00
Qty. Per Ctn.	12	12	12	6	6	2	2	1

UNITED BRASS WORKS, INC.

714 S. Main St. Randleman, N.C. 27317

Tel: 800-334-3035 Fax: 800-498-4696 www.ubw.com

Model 50T Check Valve
Spring Loaded Lift Check
Complies with MSS-SP-80-2013
CRN OCO7135.2C
200WSP @ 406° Max
400 WOG
100% Pressure Tested
Threaded Ends • PTFE Disc
Integral Seat
Contains Lead. Not Intended for Use in Potable Water Systems

Equipped with 50TG PTFE disc for general service, including steam.

MATERIAL LIST

NO.	DESCRIPTION	MATERIAL
1	Bonnet Nut (¼" – 3/8") Bonnet Nut (½" – 2")	Brass Bronze
2	Disc Holder (¼" – ¾") Disc Holder (1 " – 2')	Brass Bronze
3	Disc	PTFE
4	Disc Holder Nut (¼" – 1¼") Disc Holder Nut (1½" – 2")	Brass Bronze
5	Body	Bronze
6	Spring	Stainless Steel
7	Guide (¼" – ¾") Guide (1" – 2")	Brass Bronze

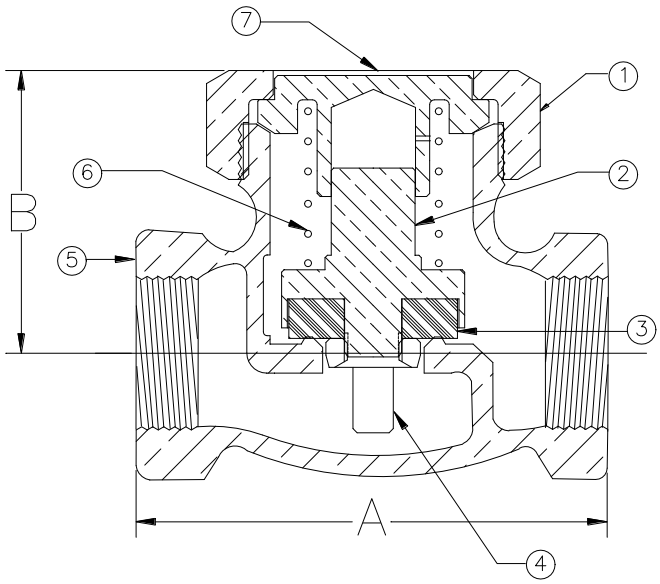

Size	¼"	3/8"	½"	¾"	1"	1 ¼"	1 ½"	2"
A	2.19	2.36	2.59	3.17	3.75	4.28	4.78	5.88
B	1.19	1.50	1.88	1.81	2.06	2.38	2.63	3.25
Ship Wgt. (lbs.)	0.56	0.75	1.03	1.61	2.44	3.84	5.20	9.00
Qty. Per Ctn.	12	12	12	6	6	2	2	1

UNITED BRASS WORKS, INC.

714 S. Main St. Randleman, N.C. 27317

Tel: 800-334-3035 Fax: 800-498-4696 www.ubw.com

Model 50LS Lift Check Valve

Complies with MSS-SP-80-2013

400 WOG @ 180 ° Max
100% Pressure Tested
Threaded Ends • Soft Disc
Integral Seat
Contains Lead. Not Intended for Use in Potable Water Systems

Not recommended for steam service.

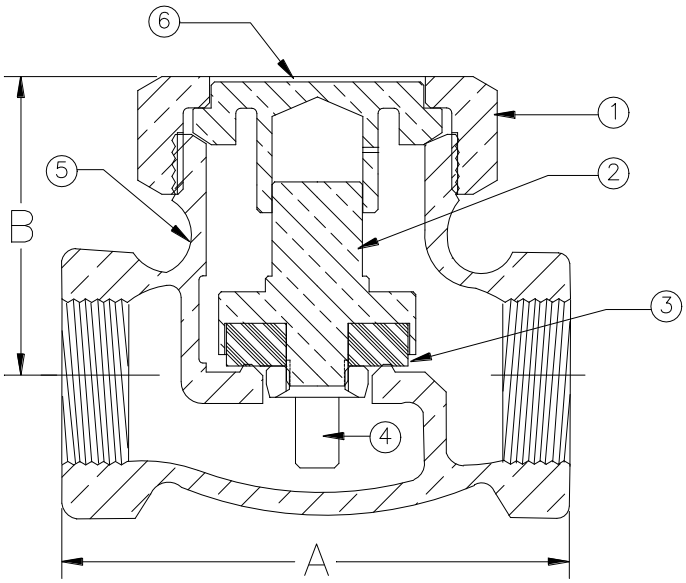

MATERIAL LIST

NO.	DESCRIPTION	MATERIAL
1	Bonnet Nut (¼" – 3/8") Bonnet Nut (½" – 2")	Brass Bronze
2	Disc Holder (¼" – ¾") Disc Holder (1" – 2")	Brass Bronze
3	Soft Disc	Buna-N
4	Disc Holder Nut (¼" – 1¼") Disc Holder Nut (1½" –2")	Brass Bronze
5	Body	Bronze
6	Guide (¼" – ¾") Guide (1" – 2"	Brass Bronze

Size	¼"	3/8"	½"	¾"	1"	1 ¼"	1 ½"	2"
A	2.19	2.36	2.59	3.17	3.75	4.28	4.78	5.88
B	1.19	1.50	1.88	1.81	2.06	2.38	2.63	3.25
Ship Wgt. (lbs.)	0.56	0.75	1.03	1.61	2.44	3.84	5.20	9.00
Qty. Per Ctn.	12	12	12	6	6	2	2	1

UNITED BRASS WORKS, INC.
714 S. Main St. Randleman, N.C. 27317
Tel: 800-334-3035 Fax: 800-498-4696 www.ubw.com

Model 50TLS Lift Check Valve

Complies with MSS-SP-80-2013
CRN OCO7135.2C

200WSP @ 406° Max
400 WOG
100% Pressure Tested
Threaded Ends • PTFE Disc
Integral Seat
Contains Lead. Not Intended for Use in Potable Water Systems

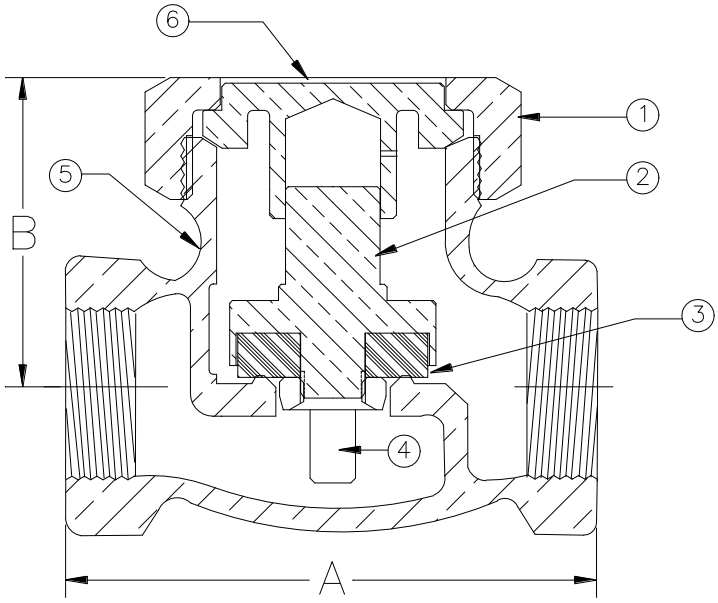

MATERIAL LIST

NO.	DESCRIPTION	MATERIAL
1	Bonnet Nut (¼" – 3/8") Bonnet Nut (½" – 2")	Brass Bronze
2	Disc Holder (¼" – ¾") Disc Holder (1" – 2")	Brass Bronze
3	Disc	PTFE
4	Disc Holder Nut (¼" – 1¼") Disc Holder Nut (1½" –2")	Brass Bronze
5	Body	Bronze
6	Guide (¼" – ¾") Guide (1" – 2"	Brass Bronze

Size	¼"	3/8"	½"	¾"	1"	1 ¼"	1 ½"	2"
A	2.19	2.36	2.59	3.17	3.75	4.28	4.78	5.88
B	1.19	1.50	1.88	1.81	2.06	2.38	2.63	3.25
Ship Wgt. (lbs.)	0.56	0.75	1.03	1.61	2.44	3.84	5.20	9.00
Qty. Per Ctn.	12	12	12	6	6	2	2	1

UNITED BRASS WORKS, INC.
714 S. Main St. Randleman, N.C. 27317
Tel: 800-334-3035 Fax: 800-498-4696 www.ubw.com

Model 53 Check Valve

Full Flow Spring-Loaded Lift Check
Complies with MSS-SP-80-2013
CRN COC7135.2C

200WSP @ 406° Max
400 WOG
100% Pressure Tested
Threaded Ends • Solid PTFE Disc
Integral Seat
Contains Lead. Not Intended for Use in Potable Water Systems

MATERIAL LIST

NO.	DESCRIPTION	MATERIAL
1	Bonnet Nut (¼" – 3/8") Bonnet Nut (½" – 2")	Brass Bronze
2	Spring	Stainless Steel
3	Disc	PTFE
4	Body	Bronze
5	Guide (¼" – ¾") Guide (1" – 2")	Brass Bronze

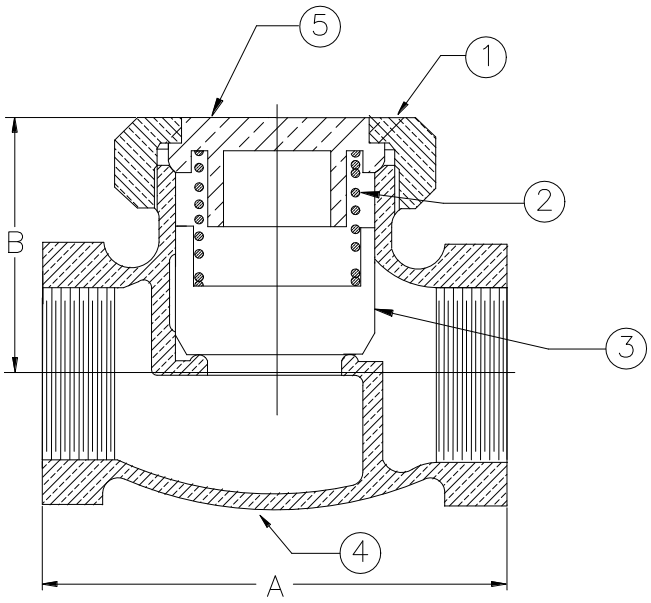

Size	¼"	3/8"	½"	¾"	1"	1 ¼"	1 ½"	2"
A	2.19	2.36	2.59	3.17	3.75	4.28	4.78	5.88
B	1.19	1.50	1.88	1.81	2.06	2.38	2.63	3.25
Ship Wgt. (lbs.)	0.56	0.75	1.03	1.61	2.44	3.84	5.20	9.00
Qty. Per Ctn.	12	12	12	6	6	2	2	1

UNITED BRASS WORKS, INC.
714 S. Main St. Randleman, N.C. 27317
Tel: 800-334-3035 Fax: 800-498-4696 www.ubw.com

Model 350T Check Valve

Spring-Loaded Lift Check
Complies with MSS-SP-80-2013
CRN OCO7135.2C

300WSP • 600 WOG
100% Pressure Tested
Threaded Ends • PTFE Disc
Integral Seat
Contains Lead. Not Intended for Use in Potable Water Systems

Equipped with 50TG PTFE disc for general service, including steam.

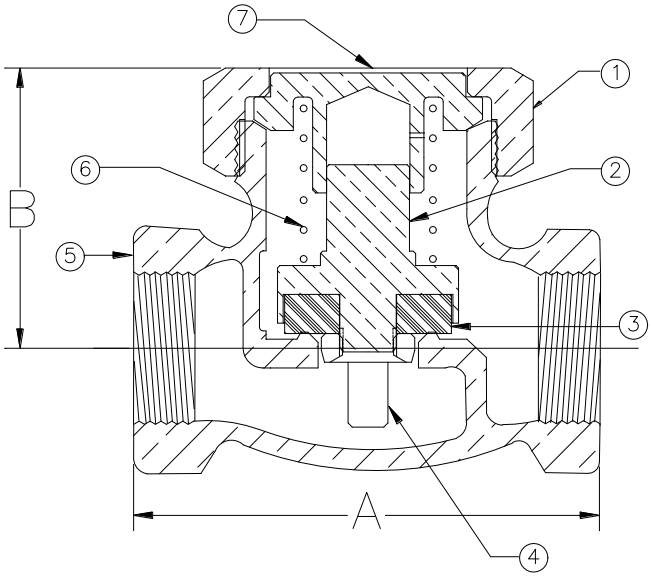

MATERIAL LIST

NO.	DESCRIPTION	MATERIAL
1	Bonnet Nut (¼" – 3/8") Bonnet Nut (½" – 2")	Brass Bonze
2	Disc Nut (¼" – ¾") Disc Nut (1" – 2")	Brass Bronze
3	Disc	PTFE
4	Disc Holder Nut (¼" – 1¼") Disc Holder Nut (1½" - 2")	Brass Bronze
5	Body	Bronze
6	Spring	Stainless Steel
7	Guide (¼" – ¾") Guide 1" – 2")	Brass Bronze

Size	½"	¾"	1"	1 ¼"	1 ½"	2"
A	2.59	3.17	3.75	4.28	4.78	5.88
B	1.88	1.81	2.06	2.38	2.63	3.25
Ship Wgt. (lbs.)	1.03	1.61	2.44	3.84	5.20	9.00
Qty. Per Ctn.	12	6	6	2	2	1

UNITED BRASS WORKS, INC.
714 S. Main St. Randleman, N.C. 27317
Tel: 800-334-3035 Fax: 800-498-4696 www.ubw.com

Model 350TLS Lift Check Valve

Complies with MSS-SP-80-2013
CRNOCO7135.2C

300WSP • 600 WOG
100% Pressure Tested
Threaded Ends • PTFE Disc
Integral Seat
Contains Lead. Not Intended for Use in Potable Water Systems

Same as 350T except there is no spring.

MATERIAL LIST

NO.	DESCRIPTION	MATERIAL
1	Bonnet Nut (¼" – 3/8") Bonnet Nut (½" – 2")	Brass Bronze
2	Disc Holder (¼" – ¾") Disc Holder (1" – 2")	Brass Bronze
3	Disc	PTFE
4	Disc Holder Nut (¼" – 1¼") Disc Holder Nut (1½" – 2')	Brass Bronze
5	Body	Bronze
6	Guide (¼" – ¾") Guide (1" – 2")	Brass Bronze

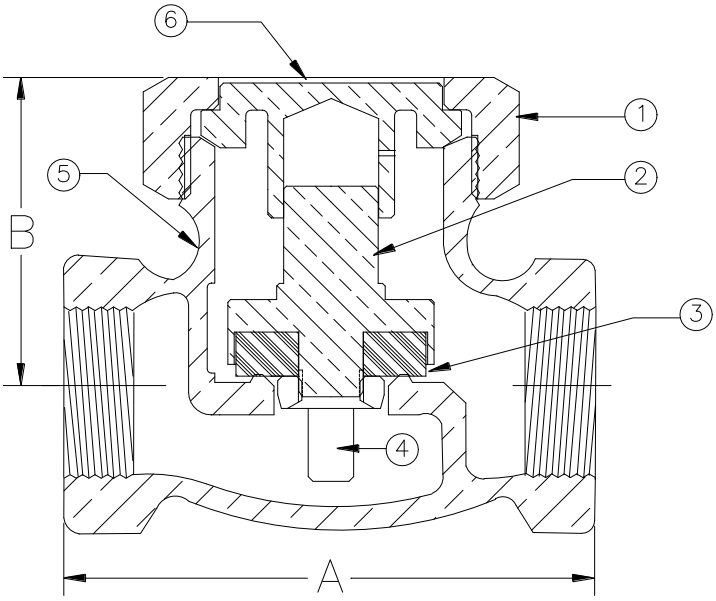

Size	½"	¾"	1"	1 ¼"	1 ½"	2"
A")/	2.59	3.17	3.75	4.28	4.78	5.88
B	1.88	1.81	2.06	2.38	2.63	3.25
Ship Wgt. (lbs.)	1.03	1.61	2.44	3.84	5.20	9.00
Qty. Per Ctn.	12	6	6	2	2	1

UNITED BRASS WORKS, INC.

714 S. Main St., Randleman, NC 27317

Tel: 800-334-3035 Fax: 800-498-4696 www.ubw.com

Model 200 Strainer With Steel Plug

200WSP @ 406° Max

400 WOG

100% Pressure Tested

Threaded Ends

All Available in 24, 50 or 100 Mesh screen sizes.

****Contains Lead. Not Intended for Use in Potable Water Systems****

CRN OCO7135.2C

MATERIAL LIST

NO.	DESCRIPTION	MATERIAL
1	Cap (¼" - 1") Cap (1¼" – 2"	Brass ASTM B16 Bronze ASTM B62
2	Screen	Stainless Steel ASTM E437
3	Body	Bronze ASTM B62
4	Plug	Stainless Steel ASTM A108

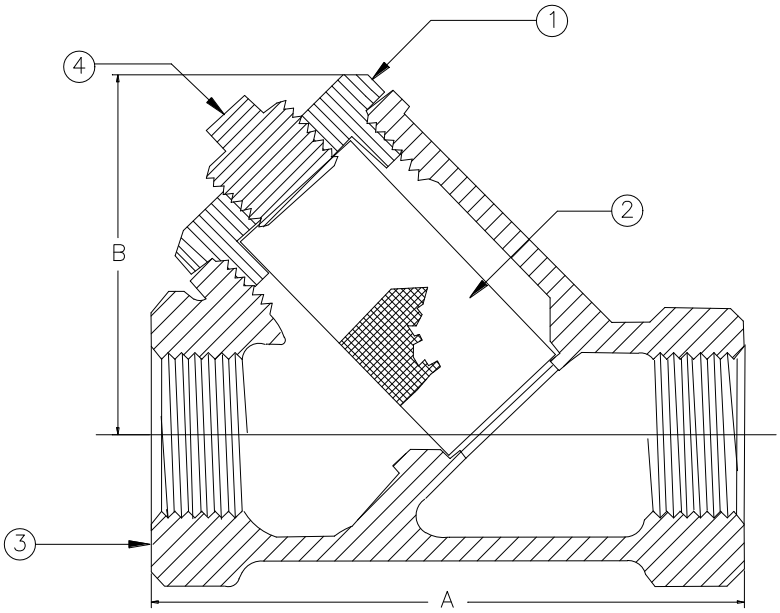

Size	¼"	3/8"	½"	¾"	1"	1 ¼"	1 ½"	2"
A	2.73	2.72	2.84	3.41	3.94	5.41	6.81	8.19
B	1.87	1.87	1.81	2.09	2.86	4.13	4.31	5.00
Ship Wgt. (lbs)	0.75	0.78	0.81	1.36	2.39	2.39	5.78	10.13
Qty. Per Ctn.	12	12	12	12	6	6	4	2

UNITED BRASS WORKS, INC.
714 S. Main St. Randleman, N.C. 27317
Tel: 800-334-3035 Fax: 800-498-4696 www.ubw.com

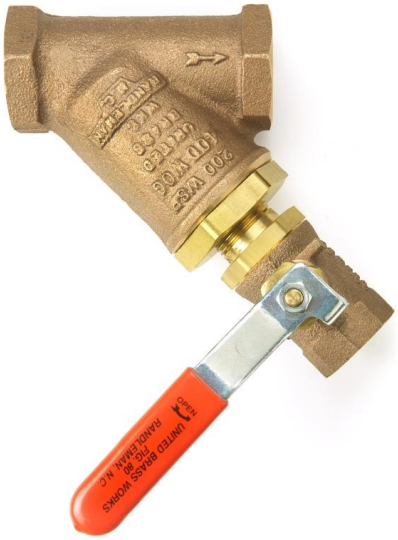

Model 200BV Strainer With Ball Valve

200WSP @ 406° Max
400 WOG
100% Pressure Tested
Threaded Ends
Contains Lead. Not Intended for Use in Potable Water Systems

All Available in 24, 50 or 100 Mesh screen sizes.

CRN OCO7135.2C

MATERIAL LIST

NO.	DESCRIPTION	MATERIAL
1	Body	ASTM B62
2	Ball Valve	See Spec 80MXF
3	Cap (1/4" – 1") Cap (11/4" – 2")	Brass ASTM B16 Bronze ASTM B62
4	Screen	Stainless Steel

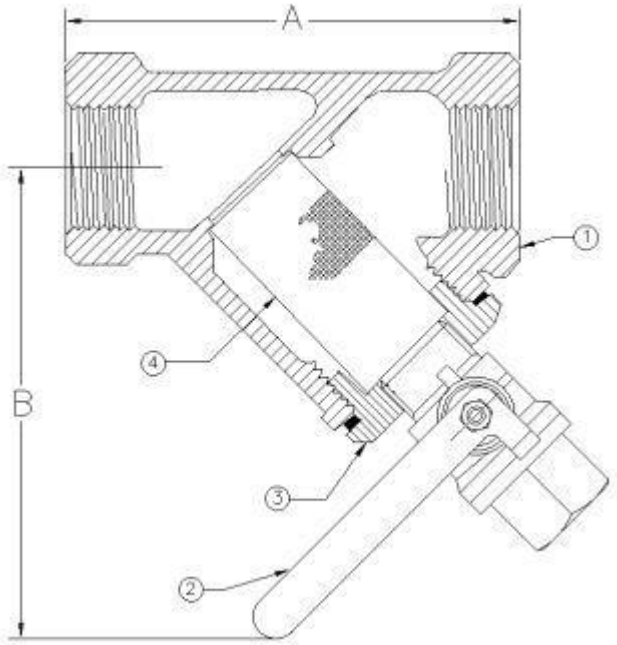

Size	¼"	3/8"	½"	¾"	1"	1 ¼"	1 ½"	2"
A	2.73	2.72	2.84	3.41	3.94	5.41	6.81	8.19
B	4.65	4.80	4.80	5.00	5.30	7.60	7.20	7.50
Ship Wgt. (lbs)	1.13	1.18	1.33	1.82	3.37	5.43	6.69	10.88
Qty. Per Ctn.	6	6	6	6	2	2	2	2

UNITED BRASS WORKS, INC.

714 S. Main St., Randleman, NC 27317

Tel: 800-334-3035 Fax: 800-498-4696 www.ubw.com

Model 200WBP Strainer With Brass Plug

200WSP @ 406° Max
400 WOG
100% Pressure Tested
Threaded Ends

All Available in 24, 50 or 100 Mesh screen sizes.

****Contains Lead. Not Intended for Use in Potable Water Systems****

CRN OCO7135.2C

MATERIAL LIST

NO.	DESCRIPTION	MATERIAL
1	Cap (¼" - 1") Cap (1¼" – 2"	Brass Bronze
2	Screen	Stainless Steel
3	Body	Bronze
4	Plug	Brass

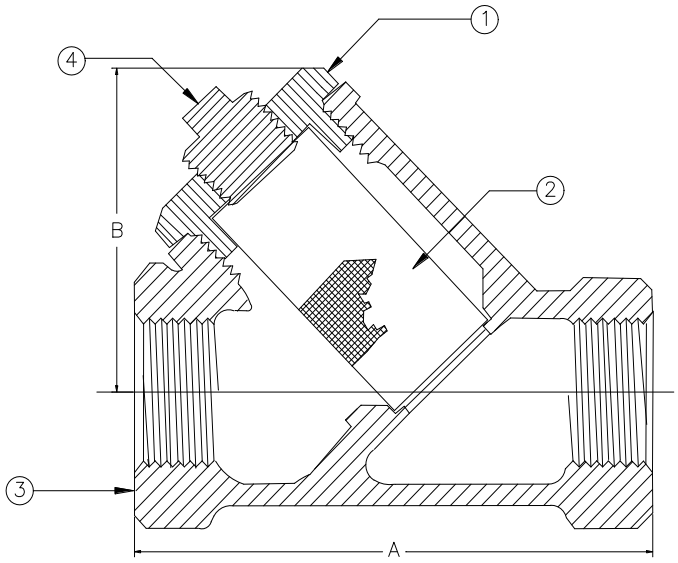

Size	¼"	3/8"	½"	¾"	1"	1 ¼"	1 ½"	2"
A	2.73	2.72	2.84	3.41	3.94	5.41	6.81	8.19
B	1.87	1.87	1.81	2.09	2.86	4.13	4.31	5.00
Ship Wgt. (lbs)	0.75	0.78	0.81	1.36	2.39	2.39	5.78	10.13
Qty. Per Ctn.	12	12	12	12	6	6	4	2

UNITED BRASS WORKS, INC.

714 S. Main St., Randleman, NC 27317

Tel: 800-334-3035 Fax: 800-498-4696 www.ubw.com

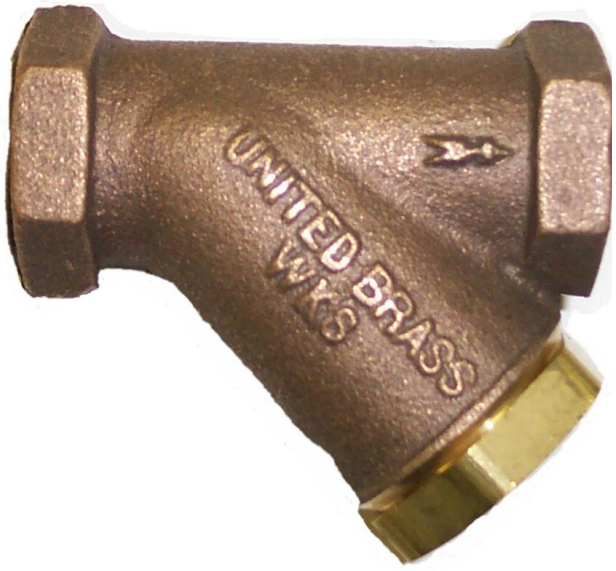

Model 200WSC Strainer With Solid Cap

200 WSP @ 406° Max

400 WOG

100% Pressure Tested

Threaded Ends

All Available in 24, 50 or 100 Mesh screen sizes.

Contains Lead. Not Intended for Use In Potable Water Systems

CRN OCO7135.2C

MATERIAL LIST

NO.	DESCRIPTION	MATERIAL
1	Cap (1/4" - 1")	Brass
2	Screen	Stainless Steel
3	Body	Bronze

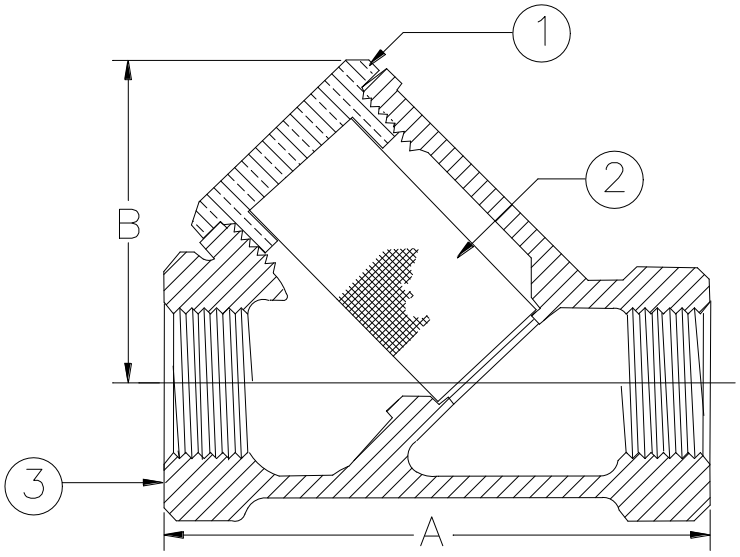

Size	¼"	3/8"	½"	¾"	1"
A	2.73	2.72	2.84	3.41	3.94
B	1.87	1.87	1.81	2.09	2.86
Ship Wgt. (lbs)	0.75	0.78	0.81	1.36	2.39
Qty. Per Ctn.	12	12	12	12	6

UNITED BRASS WORKS, INC.
714 S. Main St. Randleman, N.C. 27317
Tel: 800-334-3035 Fax: 800-498-4696 www.ubw.com

Model 19 Boiler Drain Valve
(Imported)

125 CWP @ 180° F Max.
All Brass Construction with Buna Disc
Contains Lead. Not Intended for Use in Potable Water Systems

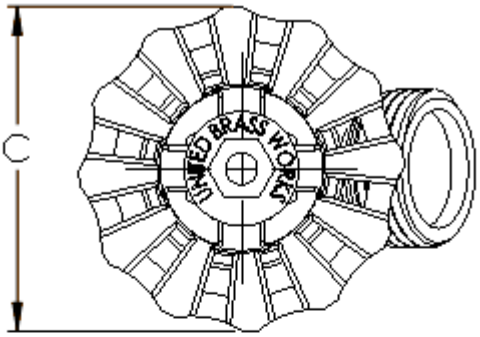

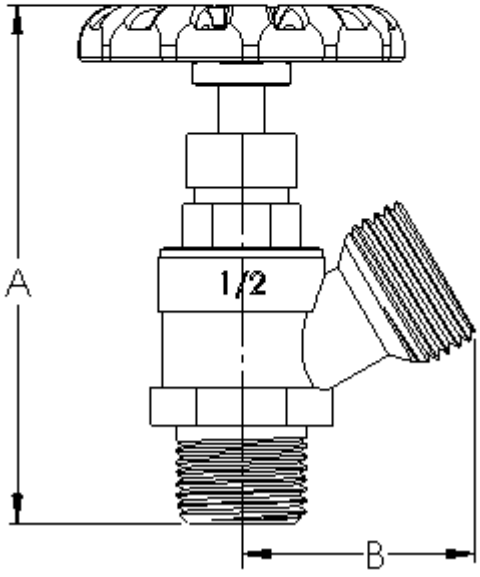

Size	1/2"	3/4"
A	3.40	3.40
B	1.50	1.50
C	2.10	2.10
Wgt. (lbs.)	.44	.53

UNITED BRASS WORKS, INC.
714 S. Main St. Randleman, N.C. 27317
Tel: 800-334-3035 Fax: 800-498-4696 www.ubw.com

Model 906C Duran® High Pressure Tubular Gage Glass

Max Pressure 295 PSI @ 425°
Ends are Fire Polished
Sold by the Dozen Only
Available Lengths
8”, 8 1/2”, 9”, 9 1/4”, 9 1/2”, 10”, 101/4”,
10 1/2”. 11”, 111/2”, 12”, 14”

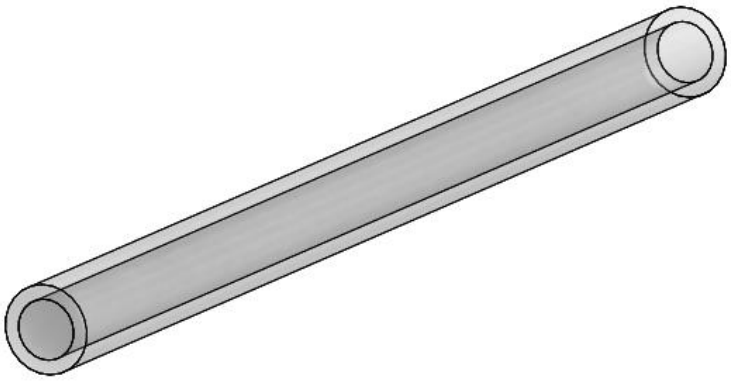

UNITED BRASS WORKS, INC.
714 S. Main St. Randleman, N.C. 27317
Tel: 800-334-3035 Fax: 800-498-4696 www.ubw.com

Model 3050 ½" Float Valve

Max Inlet Water Pressure 50PSI
Max Operating Temperature 300° F
Bronze Body
Brass Piston
EPDM Disc & O-Ring
Contains Lead. Not Intend for Use in Potable Water Systems

Available Without Piston Ring as Part 3050FU

MATERIAL LIST

NO.	DESCRIPTION	MATERIAL
1	Body	Bronze
2	O-Ring	EPDM
3	Plunger	Brass
4	Disc	EPDM
5	Long Arm	Brass
6	Thumb Screw	Brass
7	Short Arm	Brass
8	Cotter Pin	Brass

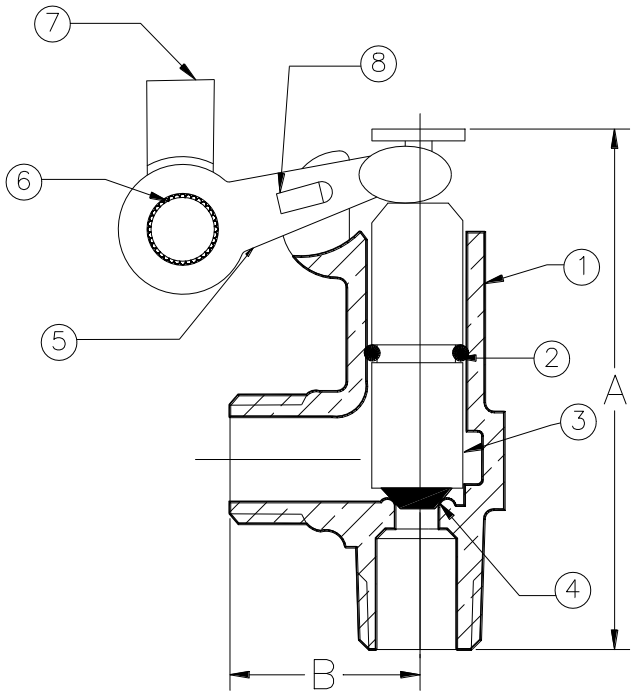

Size	½"
A	3.40
B	1.40
Ship Wt. (lbs.)	0.69
Qty. Per Carton	12

UNITED BRASS WORKS, INC.
714 S. Main St. Randleman, N.C. 27317
Tel: 800-334-3035 Fax: 800-498-4696 www.ubw.com

Model 3060 3/4" Float Valve

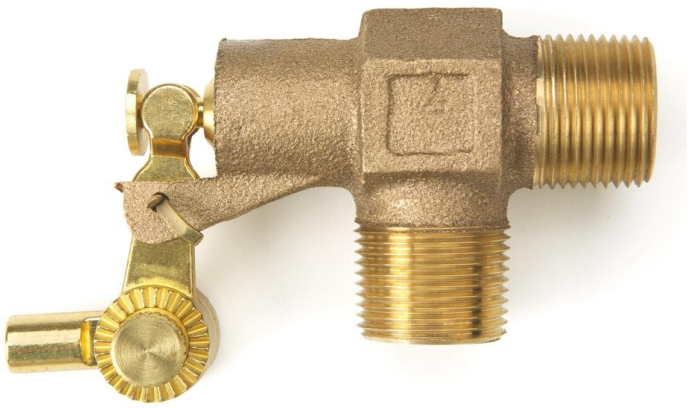

Max Inlet Water Pressure 50PSI
Max Operating Temperature 300° F
Bronze Body
Brass Piston
EPDM Disc & O-Ring
***Contains Lead. Not Intended for Use in Potable Water Systems.**

Available Without Piston O-Ring As Part 3060FU

MATERIAL LIST

NO.	DESCRIPTION	MATERIAL
1	Body	Bronze
2	O-Ring	EPDM
3	Disc	EPDM
4	Cotter Pin	Brass
5	Short Arm	Brass
6	Thumb Screw	Brass
7	Long Arm	Brass
8	Piston	Brass

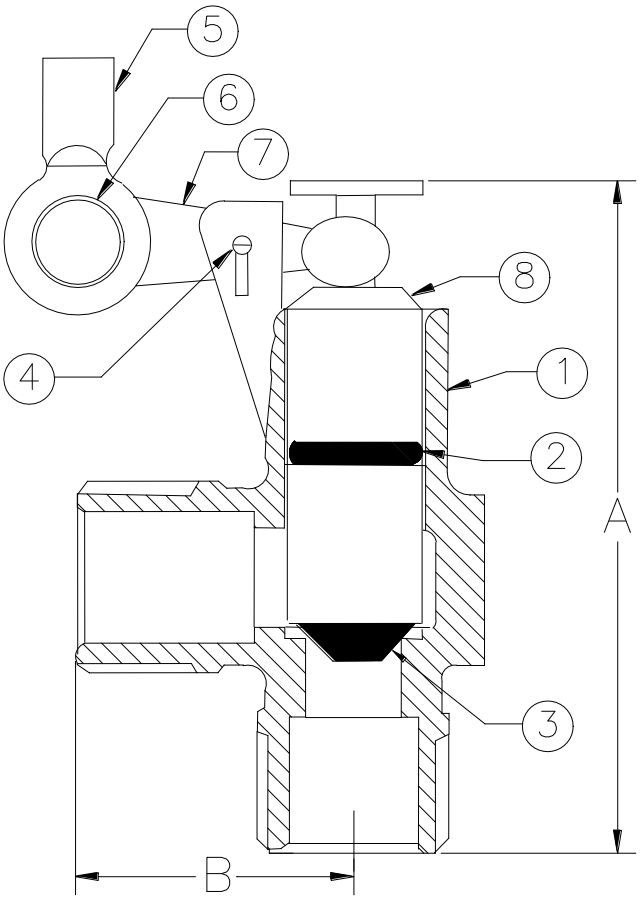

Size	3/4"
A	3.68
B	1.60
Ship Wt. (lbs.)	0.94
Qty. Per Carton	12

UNITED BRASS WORKS, INC.
714 S. Main St. Randleman, N.C. 27317
Tel: 800-334-3035 Fax: 800-498-4696 www.ubw.com

Model RS45 Float Ball

4” X 5” Oblong Ball with
1/4” Connection
Spun Copper Construction

Weight – 0.45 lbs.

UNITED BRASS WORKS, INC.
714 S. Main St. Randleman, N.C. 27317
Tel: 800-334-3035 Fax: 800-498-4696 www.ubw.com

Model RS50 Float Ball

5” Round Ball with
1/4” Connection
Spun Copper Construction

Weight – 0.44 lbs.

UNITED BRASS WORKS, INC.
714 S. Main St. Randleman, N.C. 27317
Tel: 800-334-3035 Fax: 800-498-4696 www.ubw.com

Model 3059 Float Ball Rod

1/4" Connection by 10" in Length

Includes 2 pcs. 1/4" Brass Nuts for Attaching Rod to Ball

UNITED BRASS WORKS, INC.

714 S. Main St. Randleman, N.C. 27317

Tel: 800-334-3035 Fax: 800-498-4696 www.ubw.com

Model 81T Globe Valve

Conforms with MSS-SP80-2013
CRN OCO7135.2

200 lbs. WSP @ 406° Max
400 lbs. WOG• 100% Pressure Tested
Threaded Ends • Rising Stem • Integral Seat
Swivel Disc Holder • PTFE Disc
Contains Lead. Not Intended for Use in Potable Water Systems

MATERIAL LIST

NO.	DESCRIPTION	MATERIAL
1	Hex Nut	Steel
2	Marker Disc	Aluminum
3	Hand Wheel	Zinc or Ductile Iron
4	Stem	Bronze
5	Packing Nut	Brass
6	Packing Gland	Bronze
7	Packing	NAFG
8	Bonnet	Bronze
9	Bonnet Nut	Bronze
10	Disc Holder	Bronze
11	Disc	PTFE
12	Disc Nut	Brass
13	Body	Bronze

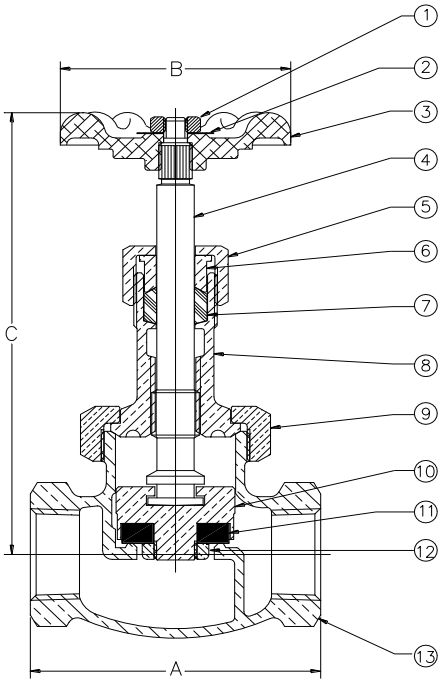

Size	1/8”	¼”	3/8”	½”	¾”	1”	1 ¼”	1 ½”	2”
A	2.11	2.11	2.33	2.63	3.06	3.78	4.51	4.75	5.81
B	1.73	1.73	2.13	2.42	2.78	3.00	3.72	3.72	4.38
C – Closed	3.81	3.81	4.59	4.59	5.13	6.00	6.94	7.63	8.44
C – Open	4.00	4.00	4.81	5.19	5.56	6.56	7.50	8.33	9.25
Ship Wt. (lbs.)	0.81	0.81	1.06	1.50	2.00	3.37	5.19	7.00	11.19
Qty. Per Ctn.	12	12	12	12	6	6	4	2	2

UNITED BRASS WORKS, INC.
714 S. Main St. Randleman, N.C. 27317
Tel: 800-334-3035 Fax: 800-498-4696 www.ubw.com

Model 381T Globe Valve

Conforms with MSS-SP80-2013
CRN OCO7135.2

300 lbs. WSP • 600 lbs. WOG • Integral Seat
100% Pressure Tested • Threaded Ends
Rising Stem • Swivel Disc Holder • PTFE Disc
***Contains Lead. Not Intended for Use in Potable Water Systems**

MATERIAL LIST

NO.	DESCRIPTION	MATERIAL
1	Hex Nut	Steel
2	Hand Wheel	Zinc or Ductile Iron
3	Stem	Bronze
4	Packing Nut	Bronze
5	Packing Gland	Bronze
6	Packing	NAFG
7	Bonnet	Bronze
8	Bonnet Nut	Bronze
9	Disc Holder	Bronze
10	Disc	PTFE
11	Disc Nut	Brass
12	Body	Bronze

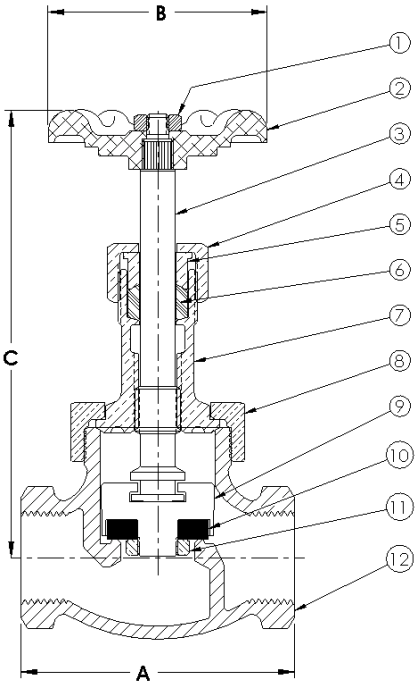

Size	½”	¾”	1”	1 ¼”	1 ½”	2”
A – Globe	2.63	3.06	3.78	4.51	4.75	5.81
B	2.42	2.78	3.00	2.93	3.72	4.36
C – Closed	4.59	5.13	6.00	6.94	7.63	8.44
C – Open	5.03	5.56	6.56	7.50	8.33	9.25
Ship Wt. (lbs.)	1.50	2.0	3.37	5.19	7.00	11.19
Qty. Per Ctn.	12	6	6	4	2	2

UNITED BRASS WORKS, INC.
714 S. Main St. Randleman, N.C. 27317
Tel: 800-334-3035 Fax: 800-498-4696 www.ubw.com

Model 966P ½" Short Shank Tricock

200 WSP @ 406° Max
400WOG
Ductile Iron Hand Wheel
Brass Body
Contains Lead. Not Intended for Use in Potable Water Systems

Available with Plastic Hand Wheel as Part No. 966PPW

MATERIAL LIST

NO.	DESCRIPTION	MATERIAL
1	Screw	Steel
2	Hand Wheel	Ductile Iron
3	Stem	Brass
4	Packing	NAFG
5	Packing Nut	Brass
6	Body	Brass
7	Nozzle	Brass
8	Washer	Brass

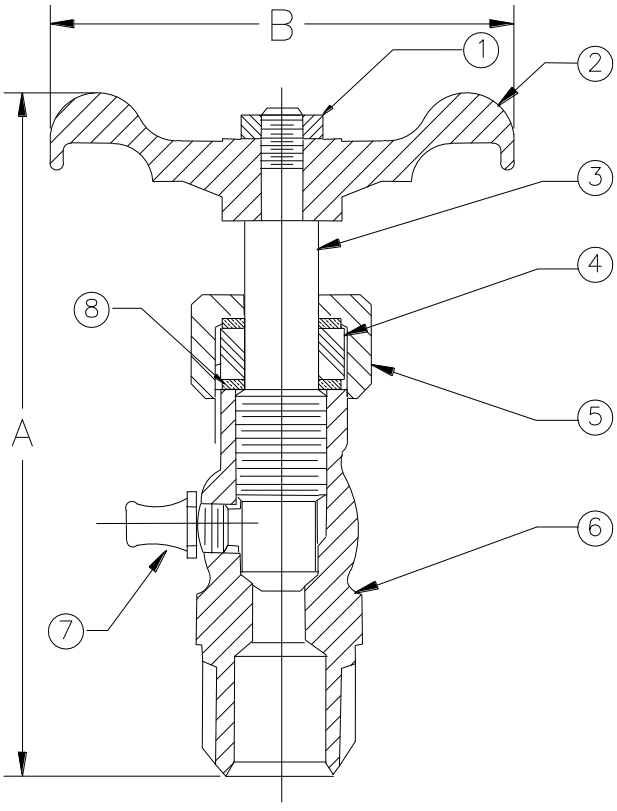

Size	½"
A	3.70
B	2.10
Ship Wt. (lbs.)	0.34
Qty. Per Carton	12

UNITED BRASS WORKS, INC.
714 S. Main St. Randleman, N.C. 27317
Tel: 800-334-3035 Fax: 800-498-4696 www.ubw.com

Model 966L ½" Long Shank Tricock

250 WSP @ 406°F Max
400WOG
Ductile Iron Hand Wheel
Brass Body
Contains Lead. Not Intended for Use in Potable Water Systems

Available with Plastic Hand Wheel as Part No. 966LPW

MATERIAL LIST

NO.	DESCRIPTION	MATERIAL
1	Screw	Steel
2	Hand Wheel	Ductile Iron
3	Stem	Brass
4	Washer	Brass
5	Packing Nut	Brass
6	Body	Brass
7	Nozzle	Brass
8	Packing	NAFG

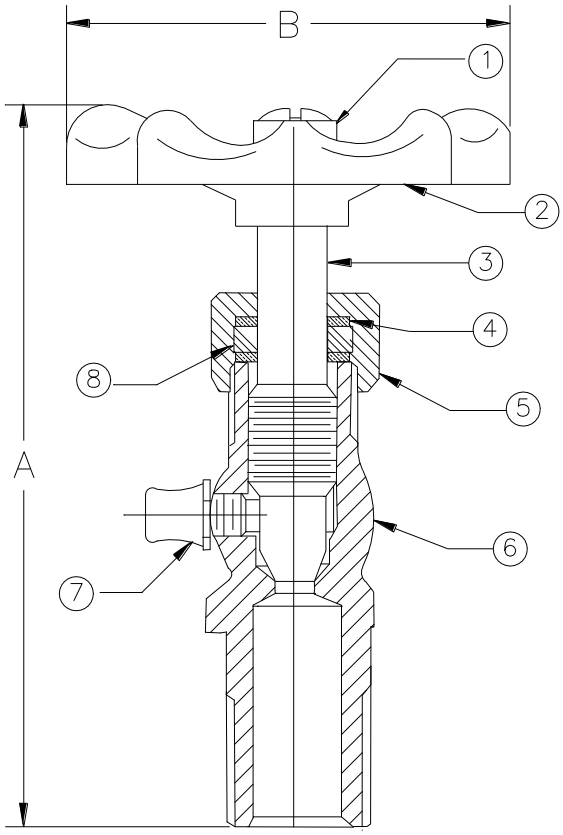

Size	½"
A	3.70
B	2.10
Ship Wt. (lbs.)	0.34
Qty. Per Carton	12

UNITED BRASS WORKS, INC.
714 S. Main St. Randleman, N.C. 27317
Tel: 800-334-3035 Fax: 800-498-4696 www.ubw.com

Model 901 ASME Safety Valve

Maximum Temperature 405°F Max
ASME Tested
National Board Certified
Body Material: Brass
Trim: Bronze
Male Inlet X Female Outlet

Side Outlet Safety Valve Capacity (lbs. per hours)					
	¾”	1”	1¼”	1½”	2”
100 lbs.	1,150	1,796	2,947	4,600	7,549
125 lbs.	1,402	2,189	3,592	5,607	9,200
150 lbs.	1,653	2,581	4,236	6,613	10,851
Outlet Size (Female)	1”	1¼”	1 ½”	2”	1½”
Ship Wgt. (lbs.)	2.75	4.25	7.50	10.00	16.75

UNITED BRASS WORKS, INC
714 S. Main St.. Randleman, N.C. 27317
Phone: 800/334-3035 Fax: 800/498-4696 www.ubw.com

Model 972I Syphon

¼" NPT Both Ends
Black Iron Pipe
300 WSP Max.
180° Pattern

UNITED BRASS WORKS, INC
714 S. Main St.. Randleman, N.C. 27317
Phone: 800/334-3035 Fax: 800/498-4696 www.ubw.com

Model 972B Syphon

¼" NPT Both Ends
Brass Pipe
200 WSP Max.
180° Pattern
***Contains lead. Not For Use In Water Systems Intended for Human**

UNITED BRASS WORKS, INC
714 S. Main St.. Randleman, N.C. 27317
Phone: 800/334-3035 Fax: 800/498-4696 www.ubw.com

Model 972AI Syphon

¼" NPT Both End
Black Iron Pipe
300 WSP Max.
90° Pattern

UNITED BRASS WORKS, INC

714 S. Main St.. Randleman, N.C. 27317

Phone: 800/334-3035 Fax: 800/498-4696 www.ubw.com

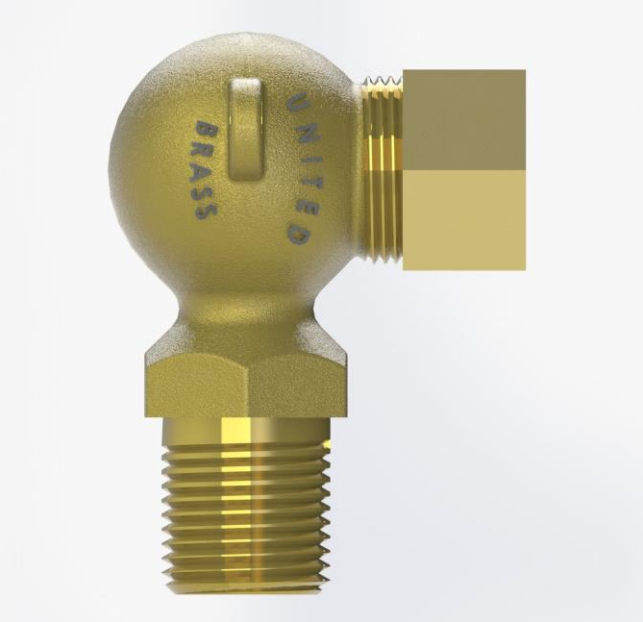

Model 910 ½” Upper Expansion Tank Fixture

250 WSP @ 406°F Max

400WOG

Bronze Body

Contains lead. Not For Use In Water Systems Intended for Human Consumption

MATERIAL LIST

NO.	DESCRIPTION	MATERIAL
1	Glass Washer Nut	Brass
2	Washer	Steel
3	Glass Washer	EPDM
4	Body	Bronze

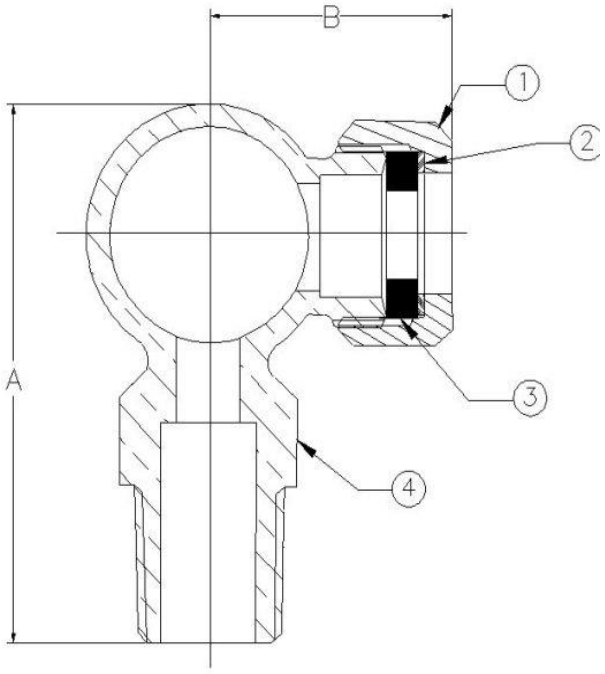

Size	1/2”
A	2.81
B	1.47
Ship Wt. (lbs.)	0.44
Qty. Per Carton	12

UNITED BRASS WORKS, INC

714 S. Main St.. Randleman, N.C. 27317

Phone: 800/334-3035 Fax: 800/498-4696 www.ubw.com

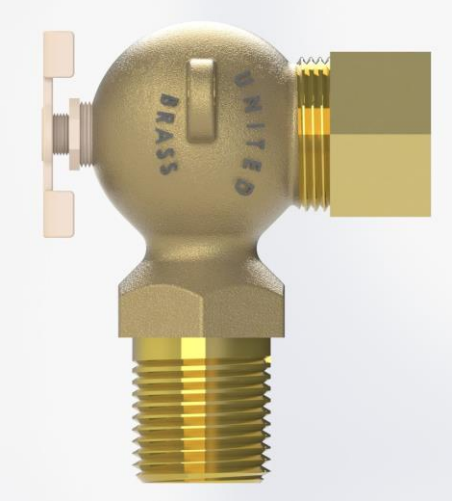

Model 911½” Lower Expansion Tank Fixture

250 WSP @ 406°F Max

400WOG

Bronze Body

Contains lead. Not For Use In Water Systems Intended for Human Consumption

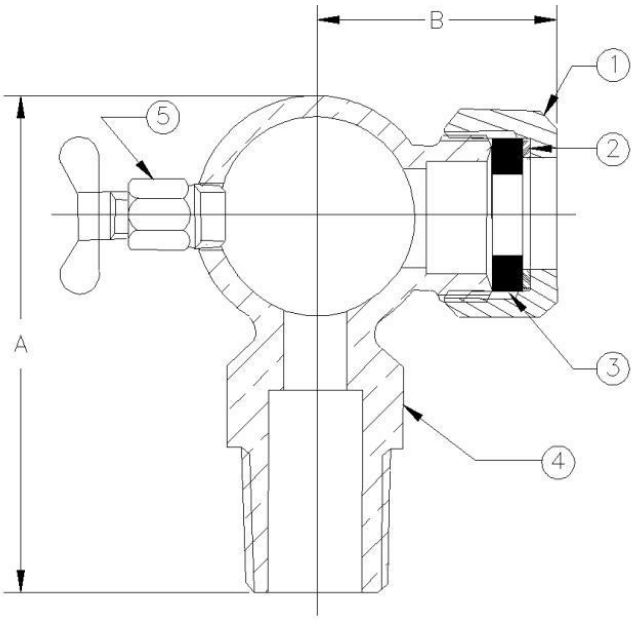

MATERIAL LIST

NO.	DESCRIPTION	MATERIAL
1	Glass Washer Nut	Brass
2	Washer	Steel
3	Glass Washer	EPDM
4	Body	Bronze
5	Drain Cock	Steel

Size	1/2”
A	2.81
B	1.47
Ship Wt. (lbs.)	0.44
Qty. Per Carton	12

UNITED BRASS WORKS, INC

714 S. Main St.. Randleman, N.C. 27317

Phone: 800/334-3035 Fax: 800/498-4696 www.ubw.com

Model 34019
Expansion Tank Fixture Set

250 WSP @ 406°F Max

Contains lead. Not For Use In Water Systems Intended for Human Consumption

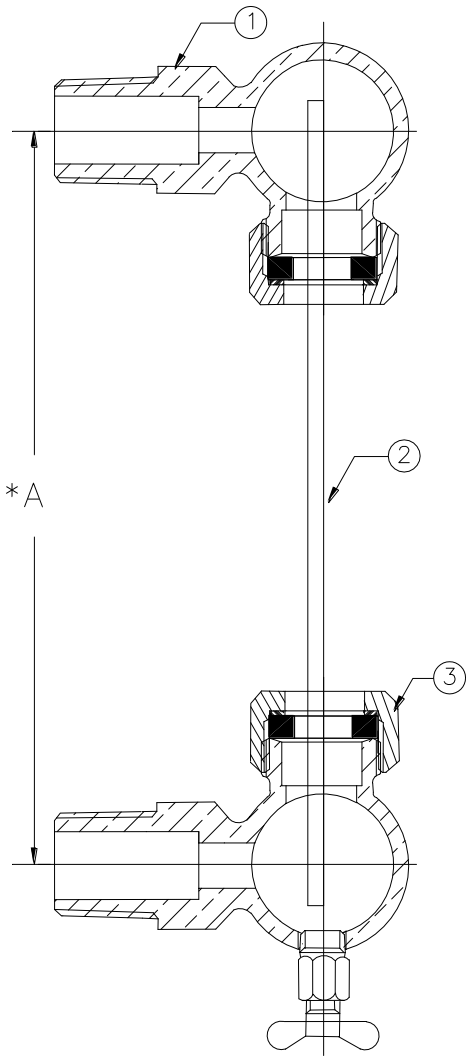

MATERIAL LIST

NO.	DESCRIPTION	MATERIAL
1	Upper Fixture	See Specs for 910
2	Protector Rods 14"	Steel
3	Lower Fixture	See Specs for 911

**** A*** ***To determine proper glass length, subtract 1 1/8" from center to center dimensions of the installed valves.***

UNITED BRASS WORKS, INC.
714 S. Main St. Randleman, N.C. 27317
Tel: 800-334-3035 Fax: 800-498-4696 www.ubw.com

Model 902 1/2" High Pressure Upper Gauge Fixture Valve With Ball Check

250WSP @ 406° F

ASME Compliant per B31.1 and Section One, PG 60 Appendix A18 of ASME Boiler Code

CRN OCO7135.2C

* Contains Lead. Not Intended for Use in Potable Water Systems *

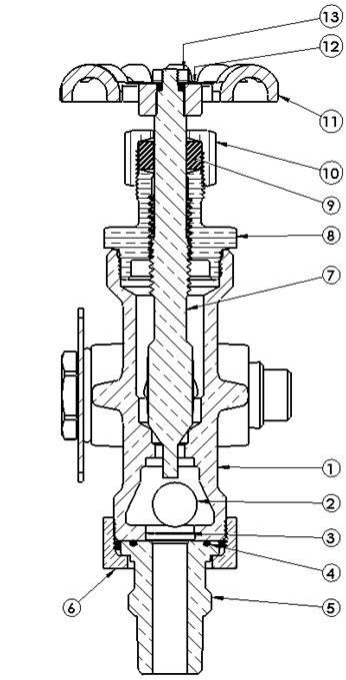

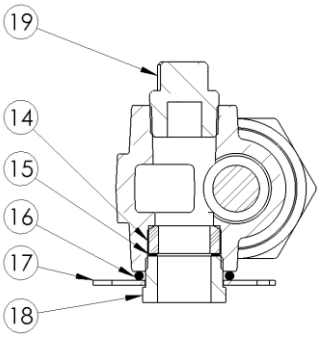

MATERIAL LIST		
No.	Description	Material
1	Body	CDA 836
2	SS Ball	302 SS
3	Retaining Ring	300 Series SS
4	O-Ring	EPDM
5	Union Tail Piece	CDA 360
6	Union Nut	CDA 922
7	Stem	CDA 693
8	Bonnet	CDA 360
9	Packing	33NAGF
10	Packing Nut	CDA 360
11	Hand Wheel	Zinc
12	Marker Disc	Aluminum
13	Brass nut	Brass
14	Seal Washer	FKM
15	Washer	Steel (Plated)
16	O-Ring	Buna
17	Rod Bracket	Stainless Steel
18	Glass Nut	CDA 360
19	Pipe Plug	CDA 360

Unit Weight 2.9 lbs.

UNITED BRASS WORKS, INC.
714 S. Main St. Randleman, N.C. 27317
Tel: 800-334-3035 Fax: 800-498-4696 www.ubw.com

Model 905 1/2”

Long Shank Upper Fixture

250 WSP @ 406°F Max
400WOG
Rising Stem • Bronze Body
Ductile Iron Hand Wheel
Contains Lead. Not Intended for Use in Potable Water Systems
CRN OCO7135.2C

MATERIAL LIST

NO.	DESCRIPTION	MATERIAL
1	Screw	Steel
2	Hand Wheel	Ductile Iron
3	Bevel Washer (2)	Brass
4	Packing Nut	Brass
5	Glass Washer Nut	Brass
6	Glass Washer	EPDM
7	Washer	Steel
8	Stem	Brass
9	Body	Bronze
10	Packing	NAFG

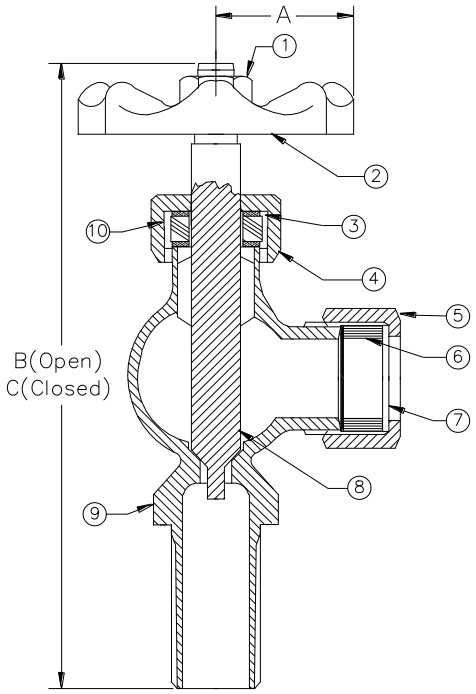

Size	½”
A	1.25
B	5.15
C	4.97
Ship Wt. (lbs.)	0.75
Qty. Per Carton	12

Available with Plastic Hand Wheel as Part 905PW

UNITED BRASS WORKS, INC.
714 S. Main St. Randleman, N.C. 27317
Tel: 800-334-3035 Fax: 800-498-4696 www.ubw.com

Model 905S 1/2”

Long Shank Upper Fixture With Ball Check

250 WSP @ 406°F Max
400WOG
Rising Stem • Bronze Body
Ductile Iron Hand Wheel
Contains Lead. Not Intended for Use in Potable Water Systems
CRN OCO7135.2C

MATERIAL LIST

NO.	DESCRIPTION	MATERIAL
1	Marker Disc	Steel
2	Hex Screw	Steel
3	Hand Wheel	Ductile Iron
4	Packing Nut	Brass
5	Metal Washer	Steel
6	Glass Washer	EPDM
7	Glass Washer Nut	Brass
8	Stem	Brass
9	Ball	Brass
10	Retaining Ring	Steel
11	Body	Bronze
12	Bevel Washer (2)	Brass
13	Packing	NAFG

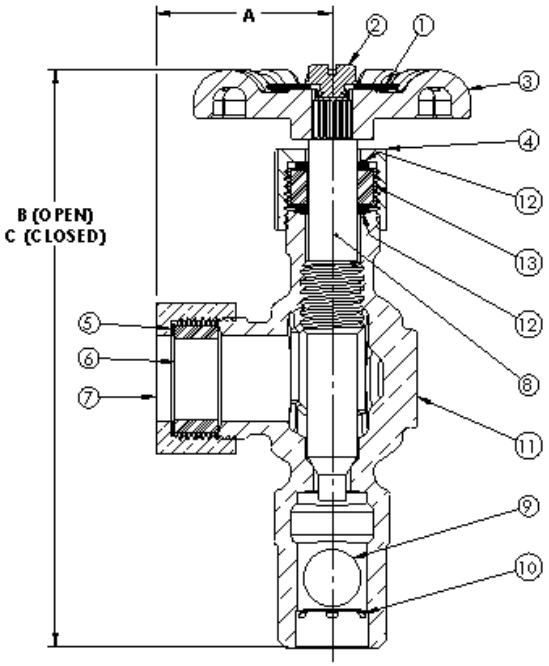

Size	1/2”
A	1.25
B	5.15
C	4.97
Ship Wt. (lbs.)	0.75
Qty. Per Carton	12

Available with Plastic Hand Wheel as Part 905SPW

UNITED BRASS WORKS, INC

714 S. Main St.. Randleman, N.C. 27317

Phone: 800/334-3035 Fax: 800/498-4696 www.ubw.com

Model 905A½”
Short Shank Upper Fixture

250 WSP @ 406°F Max
400WOG
Rising Stem · Bronze Body
Ductile Iron Hand Wheel
Contains lead. Not For Use In Water Systems Intended for Human Consumption

MATERIAL LIST

NO.	DESCRIPTION	MATERIAL
1	Screw	Steel
2	Hand Wheel	Ductile Iron
3	Packing Nut	Brass
4	Glass Washer Nut	Brass
5	Glass Washer	EPDM
6	Washer	Steel
7	Stem	Brass
8	Body	Bronze
9	Bevel Washer (2)	Brass
10	Packing	NAFG

Size	1/2”
A	1.25
B	5.20
C	5.02
Ship Wt. (lbs.)	0.63
Qty. Per Carton	12

CRN OCO7135.2C

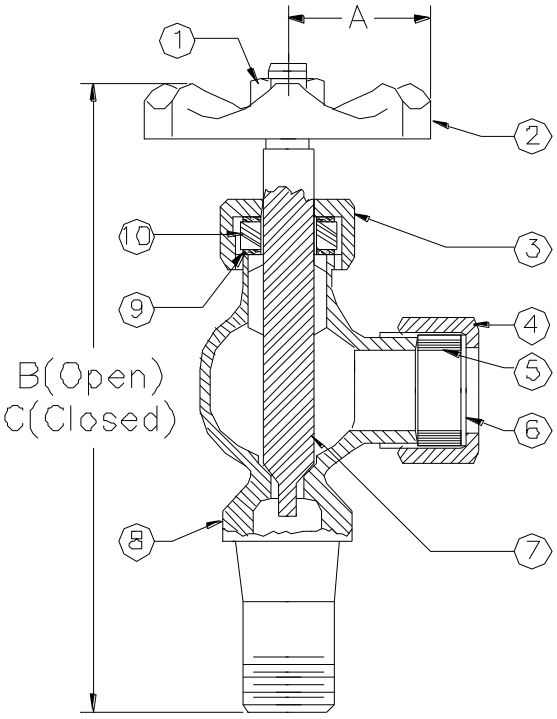

Available With Plastic Hand Wheel as Part 905APW

UNITED BRASS WORKS, INC.
714 S. Main St. Randleman, N.C. 27317
Tel: 800-334-3035 Fax: 800-498-4696 www.ubw.com

Model 905AS ½" Short Shank Upper Fixture

With Ball Check

250 WSP @ 406°F Max
400WOG
Rising Stem • Bronze Body
Ductile Iron Hand Wheel
Contains Lead. Not Intended for Use in Potable Water Systems

CRN OCO7135.2C

MATERIAL LIST

NO.	DESCRIPTION	MATERIAL
1	Marker Disc	Steel
2	Hex Screw	Steel
3	Hand Wheel	Ductile Iron
4	Packing Nut	Brass
5	Metal Washer	Steel
6	Glass Washer	EPDM
7	Glass Washer Nut	Brass
8	Stem	Brass
9	Ball	Brass
10	Retaining Ring	Stainless
11	Body	Bronze
12	Bevel Washer (2)	Steel
13	Packing	NAFG

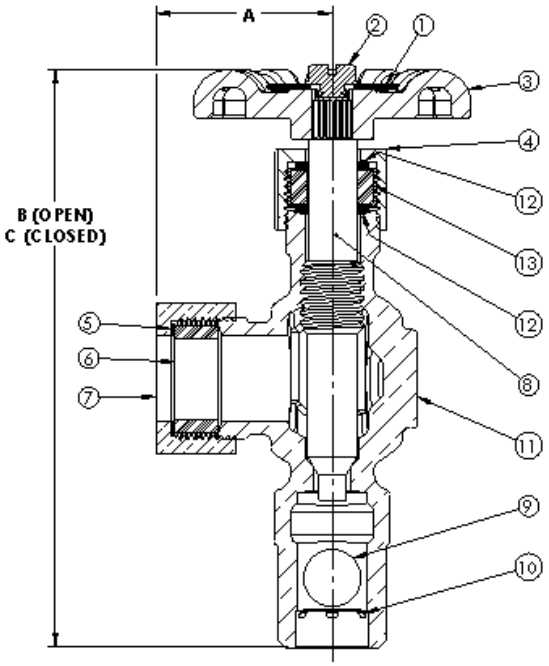

Size	½"
A	1.25
B	5.20
C	5.02
Ship Wt. (lbs.)	0.63
Qty. Per Carton	12

Available With Plastic Hand Wheel as Part 905ASPW

UNITED BRASS WORKS, INC.
714 S. Main St. Randleman, N.C. 27317
Tel: 800-334-3035 Fax: 800-498-4696 www.ubw.com

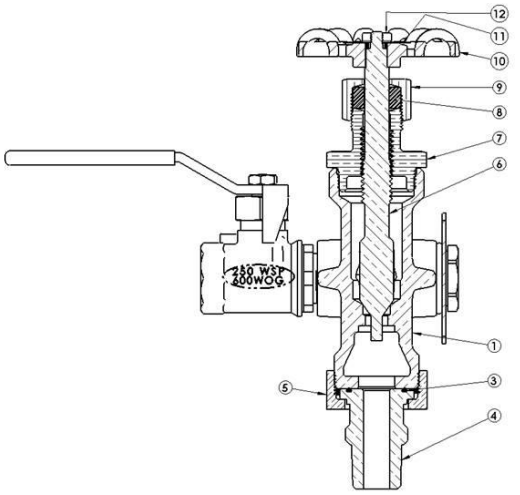

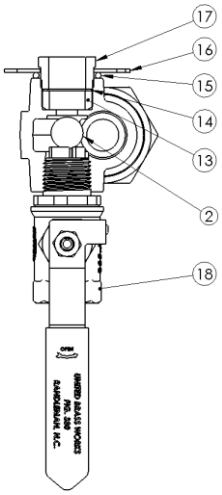

Model 903 1/2” High Pressure Lower Gauge Fixture Valve With Ball Checks

250WSP @ 406º F

ASME Compliant per B31.1 and Section one, PG 60 Appendix A18 Of ASME Boiler Code

CRN OCO7135.2C

Contains Lead. Not Intended for Use In Potable Water Systems

MATERIAL LIST		
No.	Description	Material
1	Body	CDA 836
2	S.S. Ball	302 S.S.
3	O-Ring	EPDM
4	Union Tail Piece	CDA 360
5	Union Nut	CDA 922
6	Stem	CDA 693
7	Bonnet	CDA 360
8	Packing	33 NAFG
9	Packing Nut	CDA 360
10	Hand Wheel	Zinc
11	Marker Disc	Aluminum
12	Brass Nut	Brass
13	Seal Washer	FKM
14	Washer	Steel (Plated)
15	O-Ring	EP 70 Durometer
16	Rod Bracket	300 Series S.S.
17	Glass Nut	CDA 360
18	Model 380MXFSP 1/2"	CDA 836

Unit Weight 2.8 lbs.

UNITED BRASS WORKS, INC
714 S. Main St.. Randleman, N.C. 27317
Phone: 800/334-3035 Fax: 800/498-4696 www.ubw.com

Model 946 ½”
Long Shank Lower Fixture

250 WSP @ 406°F Max
400WOG
Rising Stem • Bronze Body
Ductile Iron Hand Wheel
Contains lead. Not For Use In Water Systems Intended for Human Consumption
CRN OCO7135.2C

MATERIAL LIST

NO.	DESCRIPTION	MATERIAL
1	Screw	Steel
2	Hand Wheel	Ductile Iron
3	Packing Nut	Brass
4	Glass Washer Nut	Brass
5	Glass Washer	EPDM
6	Washer	Steel
7	Stem	Brass
8	Body	Bronze
9	Drain Cock	Brass
10	Packing	NAFG
11	Bevel Washer	Brass

Size	1/2”
A	1.25
B	5.20
C	5.02
Ship Wt. (lbs.)	0.75
Qty. Per Carton	12

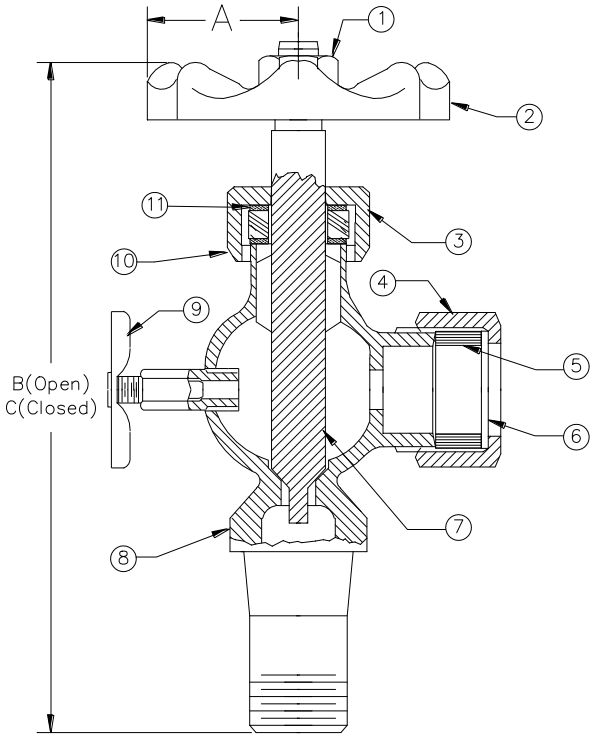

Available With Plastic Hand Wheel as Part 946PW

UNITED BRASS WORKS, INC

714 S. Main St.. Randleman, N.C. 27317

Phone: 800/334-3035 Fax: 800/498-4696 www.ubw.com

Model 946S ½”
Long Shank Lower Fixture
With Ball Check

250 WSP @ 406°F Max
400WOG
Rising Stem ~ Bronze Body
Ductile Iron Hand Wheel

Contains lead. Not For Use In Water Systems Intended for Human Consumption

CRN OCO7135.2C

MATERIAL LIST

NO.	DESCRIPTION	MATERIAL
1	Body	Bronze
2	Stem	Brass
3	Bevel Washer (2)	Brass
4	Packing	NAFG
5	Packing Nut	Brass
6	Hand Wheel	Ductile Iron
7	Tag	Steel
8	Hex Nut	Brass
9	Ball	Brass
10	Retaining Clip	Steel
11	Glass Gasket	EPDM
12	Washer	Steel
13	Glass Nut	Brass

Size	1/2”
A	1.25
B	5.20
C	5.02
Ship Wt. (lbs.)	0.63
Qty. Per Carton	12

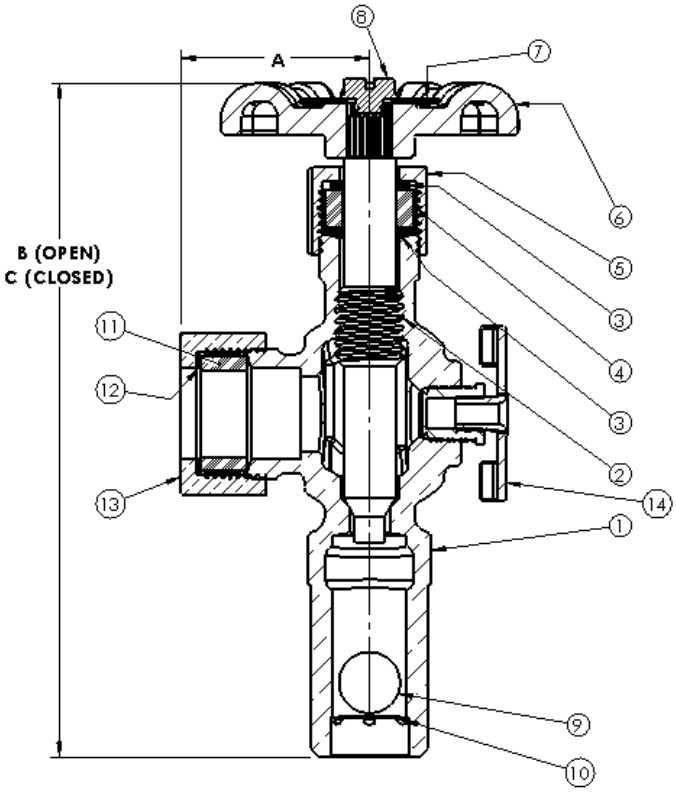

Available With Plastic Hand Wheel as Part 946SPW

UNITED BRASS WORKS, INC
714 S. Main St.. Randleman, N.C. 27317
Phone: 800/334-3035 Fax: 800/498-4696 www.ubw.com

Model 946A ½”
Short Shank Lower Fixture

250 WSP @ 406°F Max
400WOG
Rising Stem · Bronze Body
Ductile Iron Hand Wheel
Contains lead. Not For Use In Water Systems Intended for Human Consumption
CRN OCO7135.2C

MATERIAL LIST

NO.	DESCRIPTION	MATERIAL
1	Screw	Steel
2	Hand Wheel	Ductile Iron
3	Stem	Brass
4	Packing Nut	Brass
5	Bevel Washer (2)	Brass
6	Glass Washer	EPDM
7	Glass Washer Nut	Brass
8	Washer	Steel
9	Body	Bronze
10	Drain Cock	Brass
11	Packing	NAFG

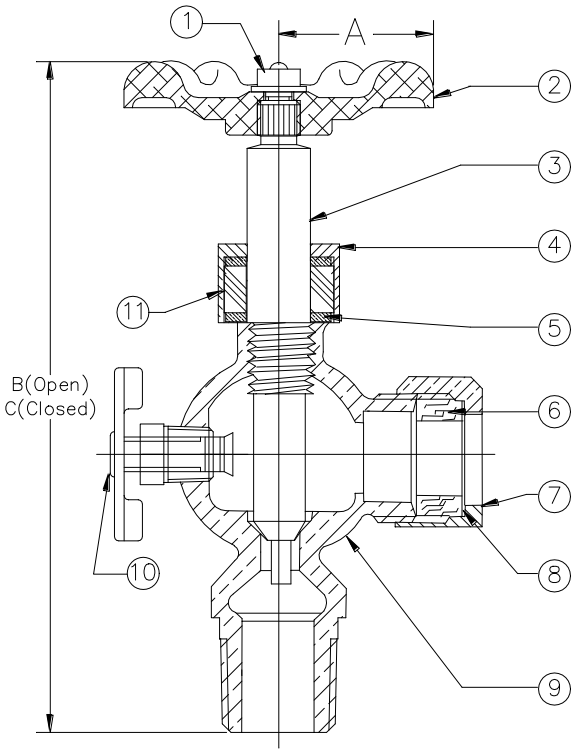

Size	1/2”
A	1.25
B	5.20
C	5.02
Ship Wt. (lbs.)	0.63
Qty. Per Carton	12

Available With Plastic Hand Wheel as Part 946APW

UNITED BRASS WORKS, INC

714 S. Main St.. Randleman, N.C. 27317

Phone: 800/334-3035 Fax: 800/498-4696 www.ubw.com

Model 946AS ½”
Short Shank Lower Fixture
With Ball Check

250 WSP @ 406°F Max
400WOG
Rising Stem · Bronze Body
Ductile Iron Hand Wheel
Contains lead. Not For Use In Water Systems Intended for Human Consumption
CRN OCO7135.2C

MATERIAL LIST

NO.	DESCRIPTION	MATERIAL
1	Body	Bronze
2	Stem	Brass
3	Bevel Washer (2)	Brass
4	Packing	NAFG
5	Packing Nut	Brass
6	Hand Wheel	Ductile Iron
7	Tag	Steel
8	Hex Nut	Brass
9	Ball	Brass
10	Retaining Clip	Steel
11	Glass Gasket	EPDM
12	Washer	Steel
13	Glass Nut	Brass

Size	1/2”
A	1.25
B	5.20
C	5.02
Ship Wt. (lbs.)	0.63
Qty. Per Carton	12

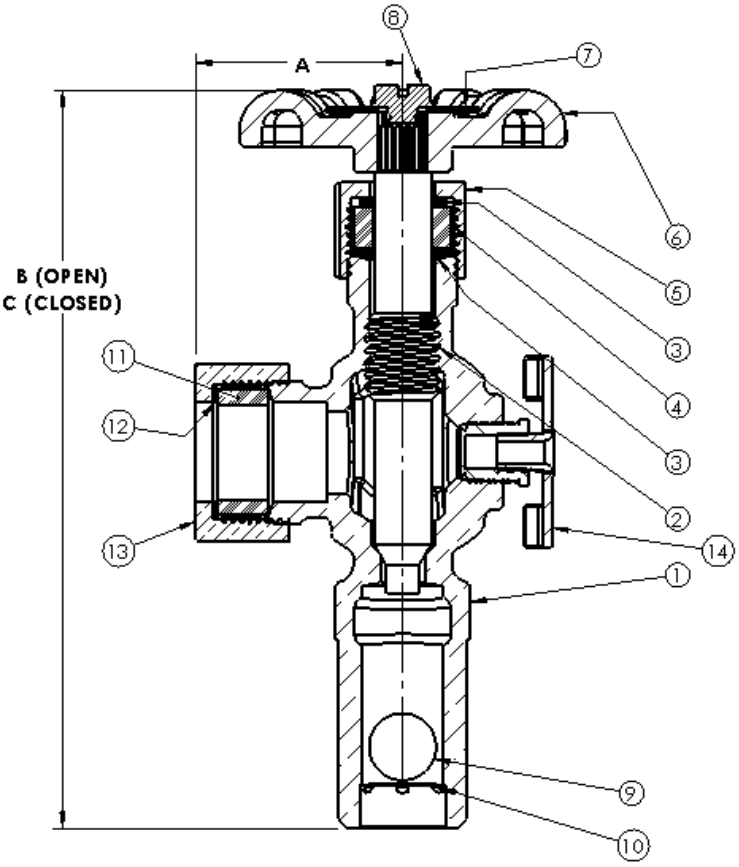

Available with Plastic Hand Wheel as Part 946ASPW

UNITED BRASS WORKS, INC

714 S. Main St.. Randleman, N.C. 27317

Phone: 800/334-3035 Fax: 800/498-4696 www.ubw.com

Model 34011 Long Shank Water Gauge Fixture Set W/Ball Valve for Blow Off

250 WSP @ 406°F Max
400WOG
Rising Stem

Contains lead. Not For Use In Water Systems Intended for Human Consumption

CRN OCO7135.2C

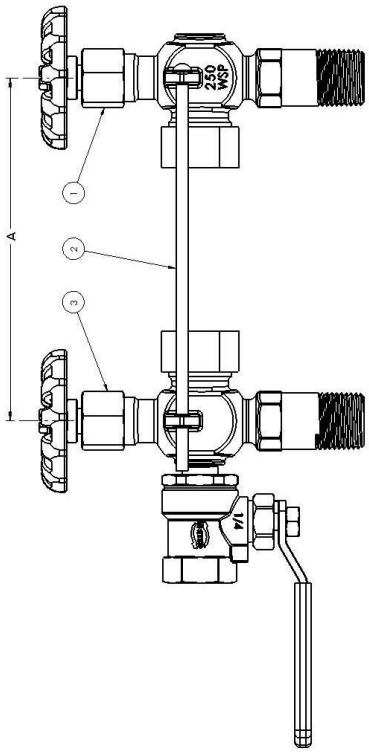

MATERIAL LIST		
NO.	DESCRIPTION	MATERIAL
1	Upper Fixture	See Specs 905
2	Protector Rods 14"	Steel
3	Lower Fixture	See Specs 946XF

A To determine proper glass length, subtract 1 1/8" from center to center dimensions of the installed valves.

UNITED BRASS WORKS, INC
714 S. Main St.. Randleman, N.C. 27317
Phone: 800/334-3035 Fax: 800/498-4696 www.ubw.com

Model 34012 Short Shank Water Gauge Fixture Set W/Ball Valve for Blow Off

250 WSP @ 406°F Max
400WOG
Rising Stem
Contains lead. Not For Use In Water Systems Intended for Human Consumption

CRN OCO7135.2C

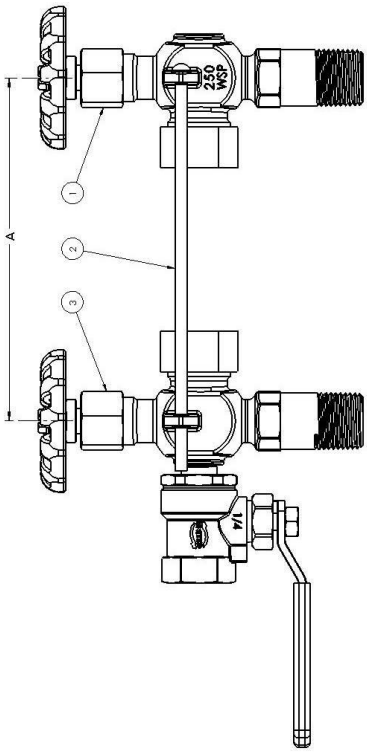

MATERIAL LIST		
NO.	DESCRIPTION	MATERIAL
1	Upper Fixture	See Specs 905A
2	Protector Rods 14"	Steel
3	Lower Fixture	See Specs 946AXFS

A To determine proper glass length, subtract 1 1/8" from center to center dimensions of the installed valves.

UNITED BRASS WORKS, INC

714 S. Main St.. Randleman, N.C. 27317

Phone: 800/334-3035 Fax: 800/498-4696 www.ubw.com

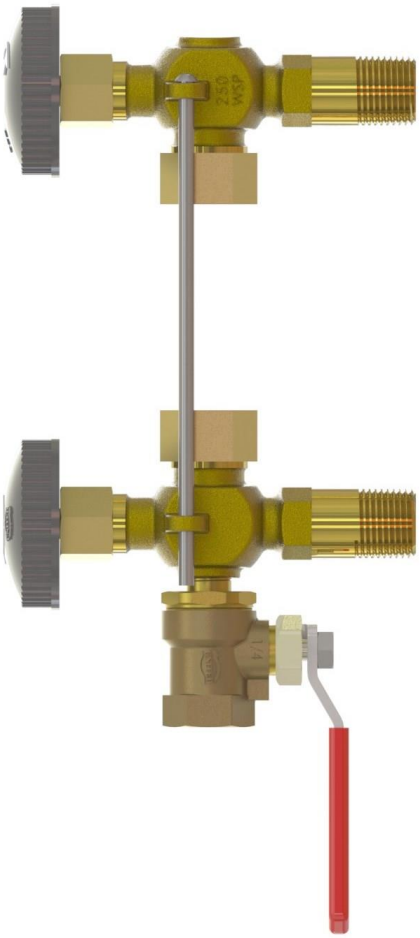

Model 34013 Long Shank Water Gauge Fixture Set W/Ball Valve for Blow Off and Plastic Hand Wheels

250 WSP @ 406°F Max
400WOG
Rising Stem

Contains lead. Not For Use In Water Systems Intended for Human Consumption

CRN OCO7135.2C

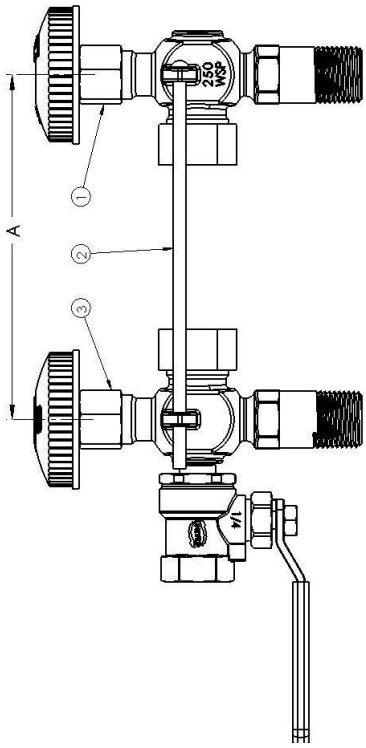

MATERIAL LIST		
NO.	DESCRIPTION	MATERIAL
1	Upper Fixture	See Specs 905PW
2	Protector Rods 14"	Steel
3	Lower Fixture	See Specs 946XFN

A To determine proper glass length, subtract 1 1/8" from center to center dimensions of the installed valves.

UNITED BRASS WORKS, INC

714 S. Main St.. Randleman, N.C. 27317

Phone: 800/334-3035 Fax: 800/498-4696 www.ubw.com

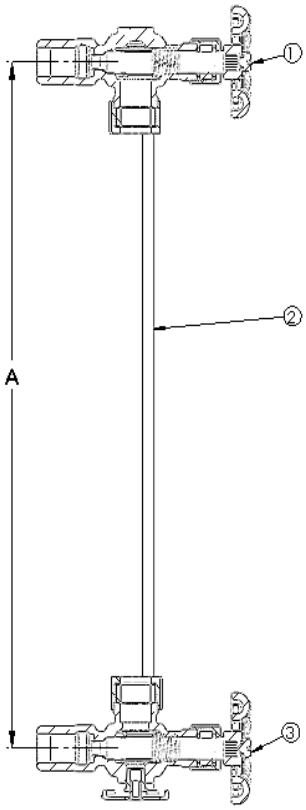

34014 1/2” Long Shank Water Gauge Fixture Set with Ball Check

250 WSP @ 406°F Max
400WOG~Rising Stem

Contains lead. Not Intended for Use in Potable Water Systems

CRN OCO7135.2C

MATERIAL LIST		
No.	Description	Material
1	905S 1/2"	See Valve Spec
2	908 Rod Set 14”	Steel
3	946A 1/2"	See Valve Spec

*A To determine proper glass length, subtract 1 1/8” from center to center dimensions of the installed valves.

UNITED BRASS WORKS, INC

714 S. Main St.. Randleman, N.C. 27317

Phone: 800/334-3035 Fax: 800/498-4696 www.ubw.com

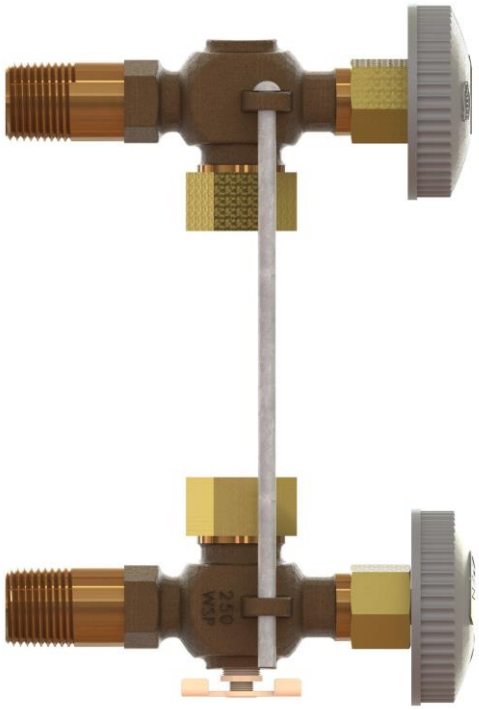

34014PW 1/2” Long Shank Water Gauge Fixture Set with Ball Checks and Plastic Hand Wheels

250 WSP @ 406°F Max

400WOG~Rising Stem

Contains lead. Not Intended for Use in Potable Water Systems

CRN OCO7135.2C

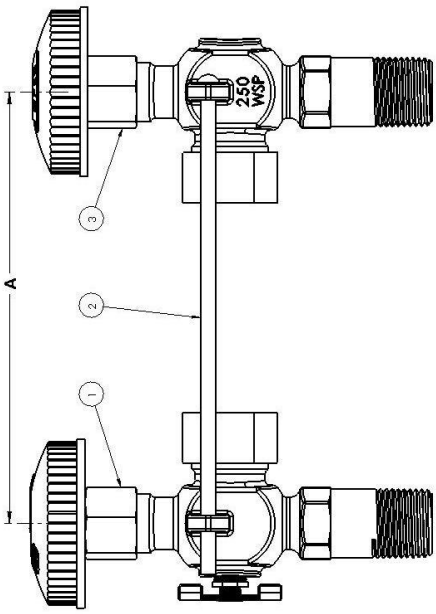

MATERIAL LIST		
No.	Description	Material
1	905SPW 1/2"	See Valve Spec
2	908 Rod Set 14”	Steel
3	946SPW 1/2"	See Valve Spec

*A To determine proper glass length, subtract 1 1/8” from center to center dimensions of the installed valves.

UNITED BRASS WORKS, INC

714 S. Main St.. Randleman, N.C. 27317

Phone: 800/334-3035 Fax: 800/498-4696 www.ubw.com

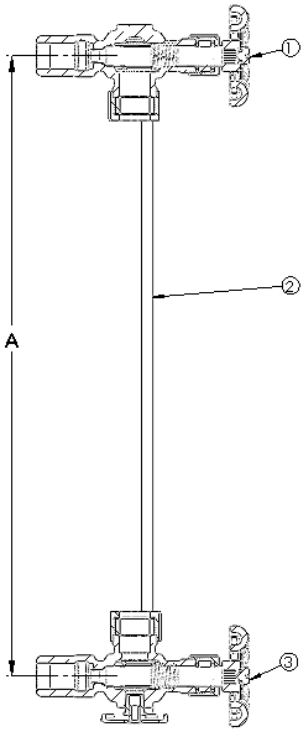

34015 1/2” Short Shank Water Gauge Fixture Set with Ball Check

250 WSP @ 406°F Max
400WOG~Rising Stem

Contains lead. Not Intended for Use in Potable Water Systems

CRN OCO7135.2C

MATERIAL LIST		
No.	Description	Material
1	905AS 1/2"	See Valve Spec
2	908 Rod Set 14”	Steel
3	946AS 1/2"	See Valve Spec

*A To determine proper glass length, subtract 1 1/8” from center to center dimensions of the installed valves.

UNITED BRASS WORKS, INC

714 S. Main St.. Randleman, N.C. 27317

Phone: 800/334-3035 Fax: 800/498-4696 www.ubw.com

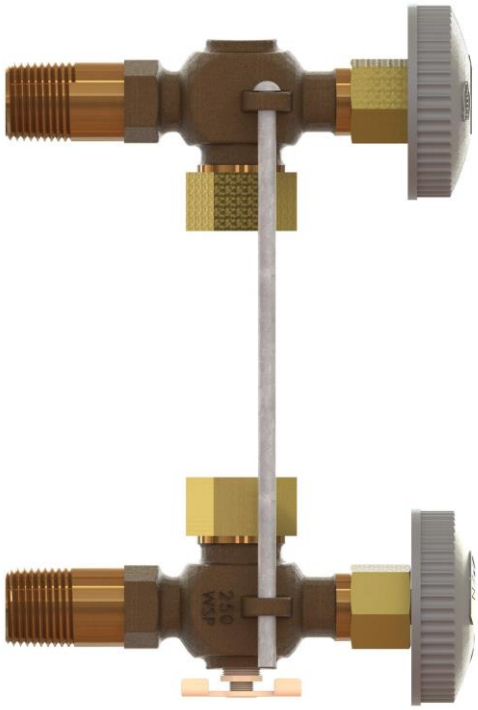

34015PW 1/2” Short Shank Water Gauge Fixture Set with Ball Checks and Plastic Hand Wheels

250 WSP @ 406°F Max
400WOG~Rising Stem

Contains lead. Not Intended for Use in Potable Water Systems

CRN OCO7135.2C

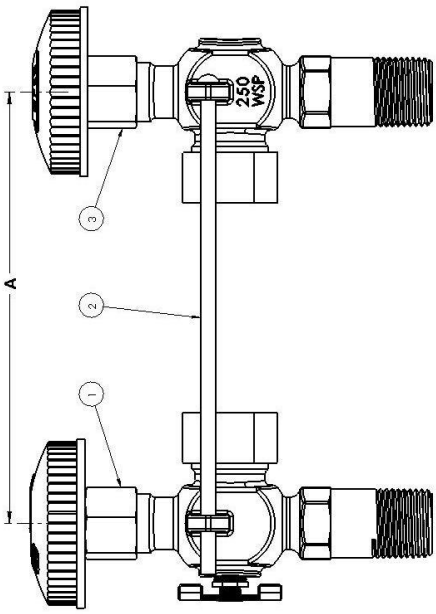

MATERIAL LIST		
No.	Description	Material
1	905ASPW 1/2"	See Valve Spec
2	908 Rod Set 14”	Steel
3	946ASPW 1/2"	See Valve Spec

*A To determine proper glass length, subtract 1 1/8” from center to center dimensions of the installed valves.

UNITED BRASS WORKS, INC

714 S. Main St.. Randleman, N.C. 27317

Phone: 800/334-3035 Fax: 800/498-4696 www.ubw.com

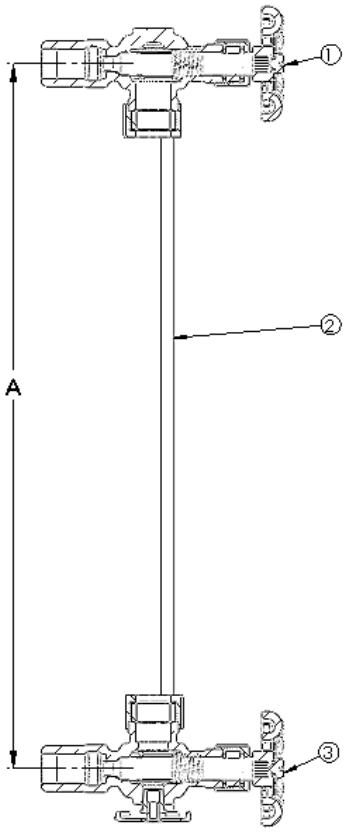

34017 1/2” Long Shank Water Gauge Fixture Set

250 WSP @ 406°F Max
400WOG~Rising Stem
Contains lead. Not Intended for Use in Potable Water Systems

CRN OCO7135.2C

MATERIAL LIST		
No.	Description	Material
1	905 1/2"	See Valve Spec
2	908 Rod Set 14”	Steel
3	946 1/2"	See Valve Spec

*A To determine proper glass length, subtract 1 1/8” from center to center dimensions of the installed valves.

UNITED BRASS WORKS, INC

714 S. Main St.. Randleman, N.C. 27317

Phone: 800/334-3035 Fax: 800/498-4696 www.ubw.com

34018 1/2” Short Shank Water Gauge Fixture Set

250 WSP @ 406°F Max
400WOG~Rising Stem

Contains lead. Not Intended for Use in Potable Water Systems

CRN OCO7135.2C

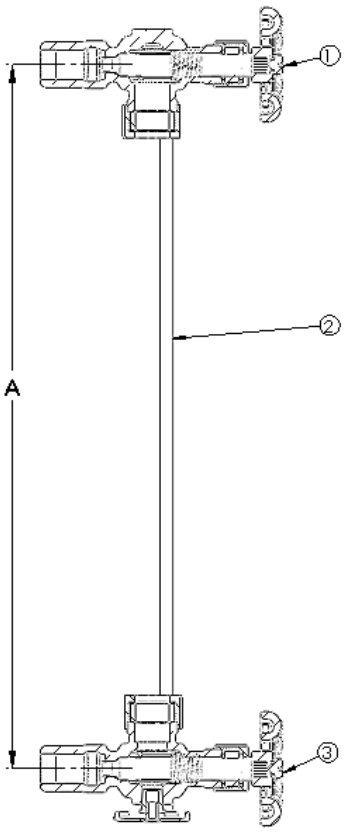

MATERIAL LIST		
No.	Description	Material
1	905A 1/2"	See Valve Spec
2	908 Rod Set 14”	Steel
3	946A 1/2"	See Valve Spec

*A To determine proper glass length, subtract 1 1/8” from center to center dimensions of the installed valves.

UNITED BRASS WORKS, INC

714 S. Main St.. Randleman, N.C. 27317

Phone: 800/334-3035 Fax: 800/498-4696 www.ubw.com

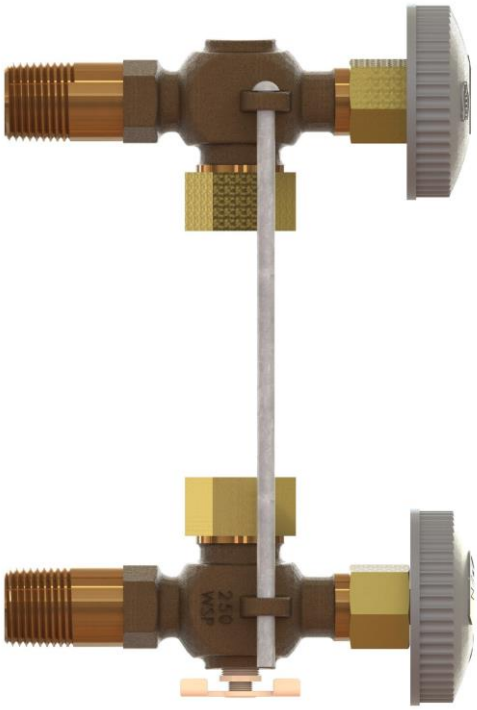

34020 1/2” Long Shank Water Gauge Fixture Set with Plastic Hand Wheels

250 WSP @ 406°F Max
400WOG~Rising Stem
Contains lead. Not Intended for Use in Potable Water Systems

CRN OCO7135.2C

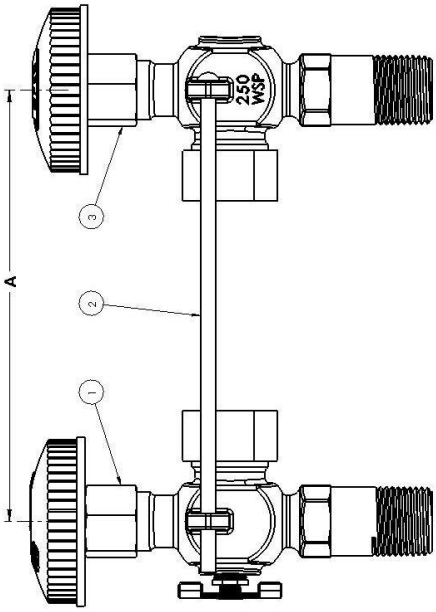

MATERIAL LIST		
No.	Description	Material
1	905PW 1/2"	See Valve Spec
2	908 Rod Set 14”	Steel
3	946PW 1/2"	See Valve Spec

*A To determine proper glass length, subtract 1 1/8” from center to center dimensions of the installed valves.

UNITED BRASS WORKS, INC

714 S. Main St.. Randleman, N.C. 27317

Phone: 800/334-3035 Fax: 800/498-4696 www.ubw.com

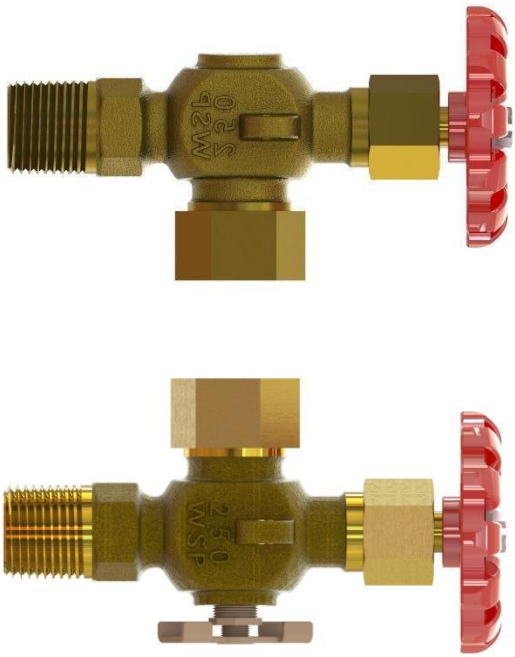

34021 1/2” Long Shank Water Gauge Fixture Set Less Protector Rods

250 WSP @ 406°F Max

400WOG~Rising Stem

Contains lead. Not Intended for Use in Potable Water Systems

CRN OCO7135.2C

MATERIAL LIST		
No.	Description	Material
1	905 1/2"	See Valve Spec
2	946 1/2"	See Valve Spec

*A To determine proper glass length, subtract 1 1/8” from center to center dimensions of the installed valves.

UNITED BRASS WORKS, INC

714 S. Main St.. Randleman, N.C. 27317

Phone: 800/334-3035 Fax: 800/498-4696 www.ubw.com

Model 34031 Short Shank Water Gauge Fixture Set W/Ball Checks and Ball Valve for Blow Off

250 WSP @ 406°F Max
400WOG
Rising Stem

Contains lead. Not For Use In Water Systems Intended for Human Consumption

CRN OCO7135.2C

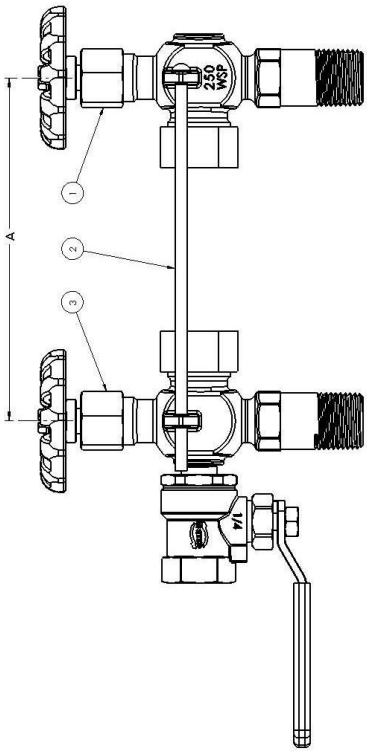

MATERIAL LIST		
NO.	DESCRIPTION	MATERIAL
1	Upper Fixture	See Specs 905AS
2	Protector Rods 14"	Steel
3	Lower Fixture	See Specs 946AXFS

A To determine proper glass length, subtract 1 1/8" from center to center dimensions of the installed valves.

UNITED BRASS WORKS, INC

714 S. Main St.. Randleman, N.C. 27317

Phone: 800/334-3035 Fax: 800/498-4696 www.ubw.com

Model 34032 Long Shank Water Gauge Fixture Set W/Ball Checks and Ball Valve for Blow Off

250 WSP @ 406°F Max
400WOG
Rising Stem

Contains lead. Not For Use In Water Systems Intended for Human Consumption

CRN OCO7135.2C

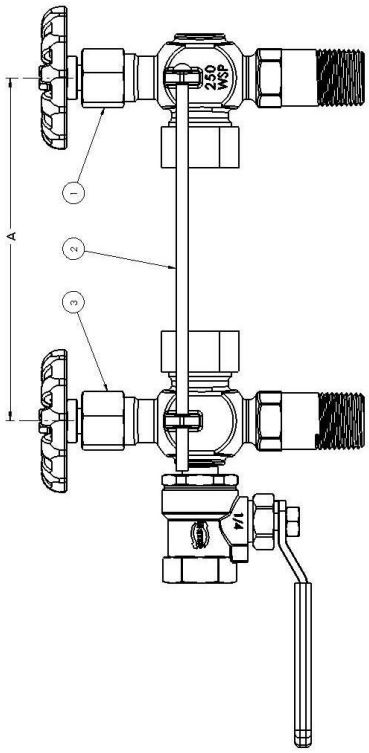

MATERIAL LIST		
NO.	DESCRIPTION	MATERIAL
1	Upper Fixture	See Specs 905S
2	Protector Rods 14"	Steel
3	Lower Fixture	See Specs 946XFS

A To determine proper glass length, subtract 1 1/8" from center to center dimensions of the installed valves.

UNITED BRASS WORKS, INC

714 S. Main St.. Randleman, N.C. 27317

Phone: 800/334-3035 Fax: 800/498-4696 www.ubw.com

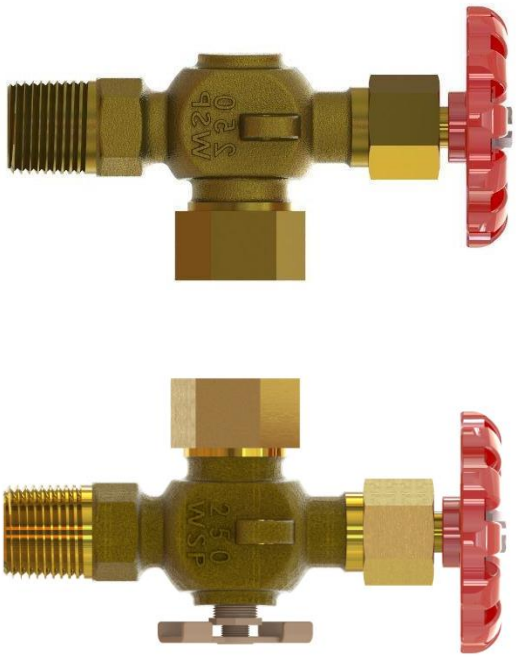

34033 1/2” Short Shank Water Gauge Fixture Set Less Protector Rods

250 WSP @ 406°F Max
400WOG~Rising Stem

Contains lead. Not Intended for Use in Potable Water Systems

CRN OCO7135.2C

MATERIAL LIST		
No.	Description	Material
1	905A 1/2"	See Valve Spec
2	946A 1/2"	See Valve Spec

*A To determine proper glass length, subtract 1 1/8” from center to center dimensions of the installed valves.

UNITED BRASS WORKS, INC

714 S. Main St.. Randleman, N.C. 27317

Phone: 800/334-3035 Fax: 800/498-4696 www.ubw.com

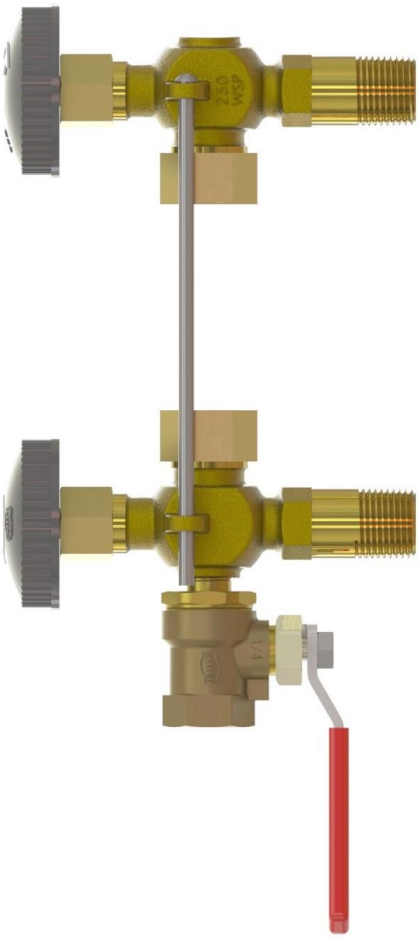

Model 34036 Long Shank Water Gauge Fixture Set W/Ball Checks, Plastic Hand Wheel and Ball Valve for Blow Off

250 WSP @ 406°F Max

400WOG

Rising Stem

Contains lead. Not For Use In Water Systems Intended for Human Consumption

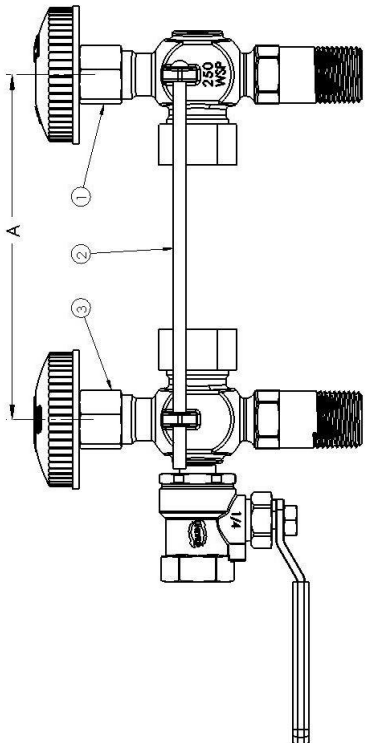

MATERIAL LIST		
NO.	DESCRIPTION	MATERIAL
1	Upper Fixture	See Specs 905SPW
2	Protector Rods 14"	Steel
3	Lower Fixture	See Specs 946XFSN

A To determine proper glass length, subtract 1 1/8" from center to center dimensions of the installed valves.

UNITED BRASS WORKS, INC

714 S. Main St.. Randleman, N.C. 27317

Phone: 800/334-3035 Fax: 800/498-4696 www.ubw.com

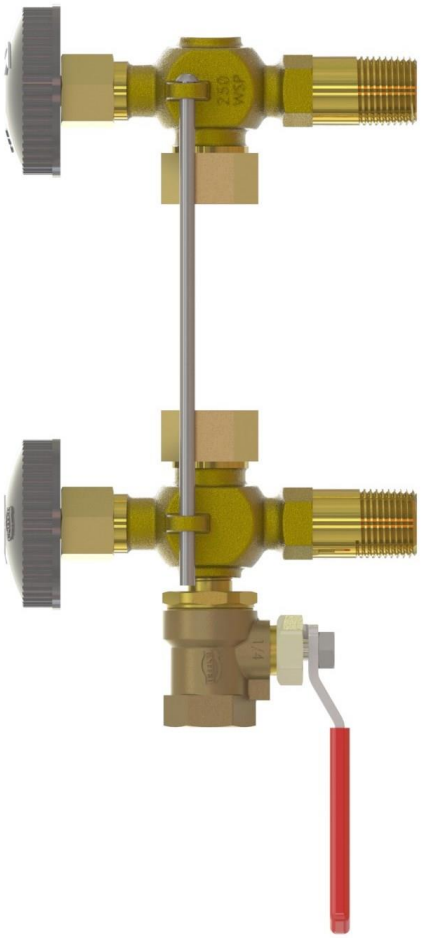

Model 34038 Short Shank Water Gauge Fixture Set W/Ball Checks, Plastic Hand Wheel and Ball Valve for Blow Off

250 WSP @ 406°F Max
400WOG
Rising Stem

Contains lead. Not For Use In Water Systems Intended for Human Consumption

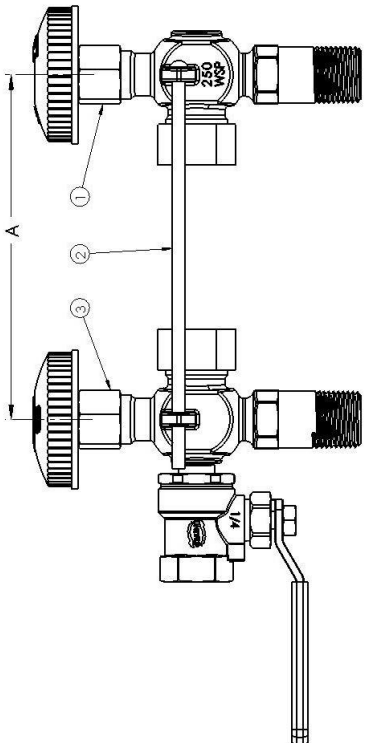

MATERIAL LIST		
NO.	DESCRIPTION	MATERIAL
1	Upper Fixture	See Specs 905ASPW
2	Protector Rods 14"	Steel
3	Lower Fixture	See Specs 946AXFSN

A To determine proper glass length, subtract 1 1/8" from center to center dimensions of the installed valves.

UNITED BRASS WORKS, INC.
714 S. Main St. Randleman, N.C. 27317
Tel: 800-334-3035 Fax: 800-498-4696 www.ubw.com

Model 34041 High Pressure Boiler Gauge Fixture Set With Ball Check

250WSP @ 406° F

ASME Compliant per B31.1 and Section One, PG 60 Appendix A18 of ASME Boiler Code

CRN OCO7137.2C

This gauge fixture set is an offset design. Both valves have union bonnets with blow-out proof stems. The union tail pieces incorporate an 1/8" adjustment to aid in alignment.

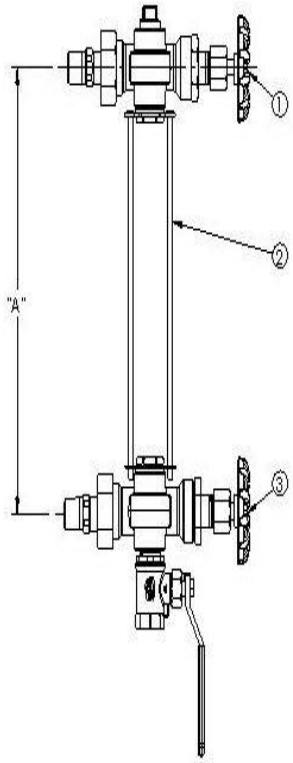

*** Contains Lead. Not Intended for Use in Potable Water Systems ***

MATERIAL LIST		
No.	Description	Material
1	902 1/2"	See Valve Spec
2	908 Rod Set 10"	Steel
3	903 1/2"	See Valve Spec

To determine proper glass length Subtract 3/4" from the center-to-center Dimension of the installed valves

Unit Weight 6.5 lbs.

UNITED BRASS WORKS, INC.
714 S. Main St. Randleman, N.C. 27317
Tel: 800-334-3035 Fax: 800-498-4696 www.ubw.com

Model 897 Bronze Size 5 Site Glass

300 WSP @ 450 ° F Max
600 WOG
100% Pressure Tested ● Threaded Ends
Designed to Boiler and Pressure Vessel Code Section 1 & ASME B31.1
Install Using Supplied Nipples Only Along with United Brass Gauge Valve Sets to Maintain 11 1/2" Center-To-Center Dimensions
Contains Lead. Not For Use in Potable Water Systems

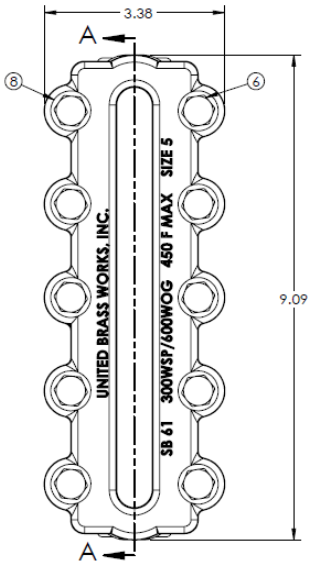

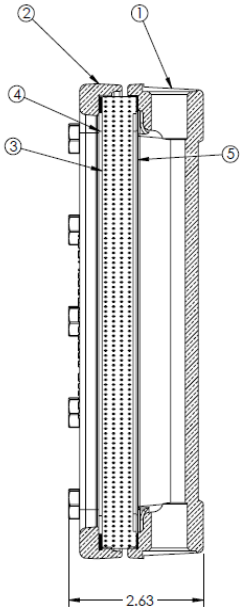

SECTION A-A

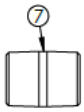

MATERIAL LIST			
NO.	DESCRIPTION	MATERIAL	QUANTITY
1	SIZE 5 GAUGE BODY	ASTM B61	1
2	COVER SIZE 5	ASTM B61	1
3	SIZE 5 REFLEX GLASS	BOROSILICATE	1
4	GAUGE GLASS CUSHION	KLINGER 4430	1
5	GAUGE GLASS GASKET	GRAFOIL	1
6	HEX HEAD CAP SCREW	STAINLESS STEEL SAE J429 GRADE 8	10
7	SPECIAL NIPPLE	ASTM B43	2
8	DISC SPRING WASHER	301/302 STAINLESS STEEL	10

APPLICABLE UBW GAUGE VALVE SETS

PART NO.	DESCRIPTION
900S	1/2" VALVE SET SLOW OPENING
900S	3/4" VALVE SET SLOW OPENING
900Q	1/2" VALVE SET QUICK OPENING
900Q	3/4" VALVE SET QUICK OPENING

UNITED BRASS WORKS, INC.
714 S. Main St. Randleman, N.C. 27317
Tel: 800-334-3035 Fax: 800-498-4696 www.ubw.com

Model 898 Bronze Size 7 Site Glass

300 WSP @ 450 ° F Max
600 WOG
100% Pressure Tested ● Threaded Ends
Designed to Boiler and Pressure Vessel Code Section 1 & ASME B31.1
Install Using United Brass Gauge Valve Sets Only. Can Be Used to Maintain 11 1/2" and 12 3/4" Center-To-Center Dimensions Depending on How They Are Installed.
Instructions Included With Valve Sets
Contains Lead. Not For Use in Potable Water Systems

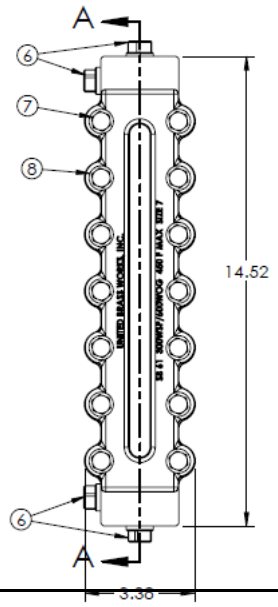

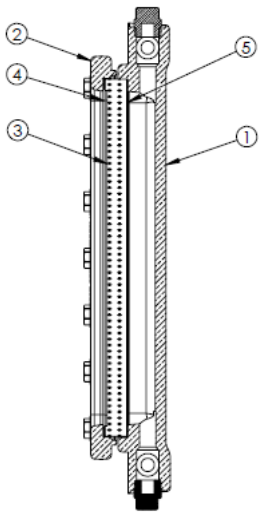

SECTION A-A

MATERIAL LIST			
NO.	DESCRIPTION	MATERIAL	QUANTITY
1	SIZE 7 GAUGE BODY	ASTM 661	1
2	COVER SIZE 7	ASTM B61	1
3	SIZE 7 REFLEX GLASS	BOROSILICATE	1
4	GAUGE GLASS CUSHION	KLINGER 4430	1
5	GAUGE GLASS GASKET	GRAFOIL	1
6	BRASS PIPE PLUGS ½"	ASTM B16	4
7	HEX HEAD CAP SCREW	STAINLESS STEEL J429 GRADE 8	14
8	DISC SPRING WASHER	301/302 STAINLESS STEEL	14

APPLICABLE UBW GAUGE VALVE SETS

PART NO.	DESCRIPTION
900S	1/2" VALVE SET SLOW OPENING
900S	3/4" VALVE SET SLOW OPENING
900Q	1/2" VALVE SET QUICK OPENING
900Q	3/4" VALVE SET QUICK OPENING

UNITED BRASS WORKS, INC.
714 S. Main St. Randleman, N.C. 27317
Tel: 800-334-3035 Fax: 800-498-4696 www.ubw.com

Model 899 Bronze Size 7 Special Site Glass

300 WSP @ 450 ° F Max
600 WOG
100% Pressure Tested ● Threaded Ends
Designed to Boiler and Pressure Vessel Code Section 1 & ASME B31.1
Install with United Brass Gauge Valve Sets Only to Maintain 12 7/8" Center-To-Center Dimensions. Instructions Included with Valve Sets.
Contains Lead. Not For Use in Potable Water Systems

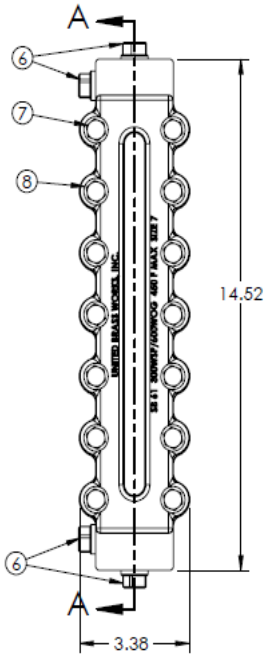

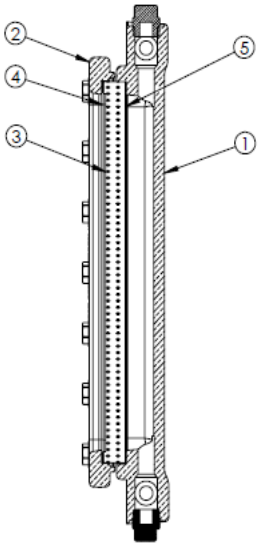

SECTION A-A

MATERIAL LIST			
NO.	DESCRIPTION	MATERIAL	QUANTITY
1	SIZE 7 GAUGE BODY	ASTM B61	1
2	COVER SIZE 7	ASTM B61	1
3	SIZE 7 REFLEX GLASS	BOROSILICATE	1
4	GAUGE GLASS CUSHION	KLINGER 4430	1
5	GAUGE GLASS GASKET	GRAFOIL	1
6	BRASS PIPE PLUGS ½"	ASTM B16	4
7	HEX HEAD CAP SCREW	STAINLESS STEEL J429 GRADE 8	14
8	DISC SPRING WASHER	301/302 STAINLESS STEEL	14

APPLICABLE UBW GAUGE VALVE SETS

PART NO.	DESCRIPTION
900S	1/2" VALVE SET SLOW OPENING
900S	3/4" VALVE SET SLOW OPENING
900Q	1/2" VALVE SET QUICK OPENING
900Q	3/4" VALVE SET QUICK OPENING

UNITED BRASS WORKS, INC.

714 S. Main St. Randleman, N.C. 27317

Tel: 800-334-3035 Fax: 800-498-4696 www.ubw.com

Model 900Q 1/2” Quick Opening Valve
Set With Ball Checks

300 WSP @ 450 ° F Max

600 WOG

100% Pressure Tested

ASME Compliant per B31.1 and Section One, PG 60

Appendix A18 of ASME Boiler Code.

Complete Installation Instructions Are Included With Each Set

Contains Lead. Not For Use in Potable Water Systems

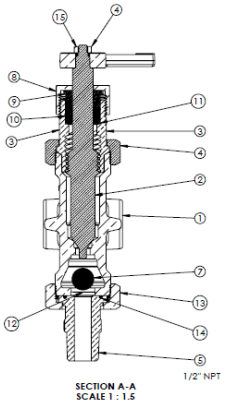

UPPER VALVE

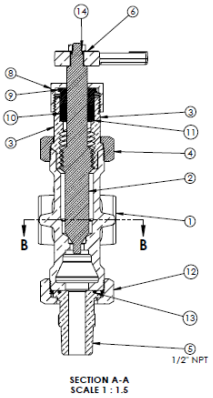

LOWER VALVE

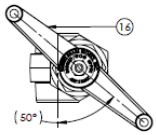

UPPER VALVE LEVER

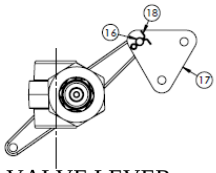

LOWER VALVE LEVER

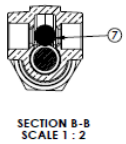

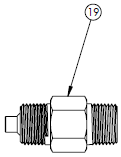

SPECIAL DRAIN FITTING

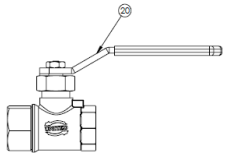

BALL VALVE 300 WSP

MATERIAL LIST

PART NO.	DESCRIPTION	MATERIAL	QUANTITY	PART NO.	DESCRIPTION	MATERIAL	QUANTITY
1	UNION NUT	ASTM B61	1	11	O-RING	TFE/P	1
2	PACKING GLAND	ASTM B16	1	12	PACKING WASHER	300 STAINLESS	1
3	PACKING	33 NAFG	1	13	UNION NUT	ASTM B61	1
4	MARKER DISC	300 STAINLESS	1	14	JAM NUT	ASTM B19	1
5	BODY	ASTM B61	1	15	TEE HANDLE	ASTM B62	1
6	STEM	ASTM B21	1	16	CLEVIS PIN	STAINLESS	1
7	BONNET	ASTM B61	1	17	EQUALIZE	CARBON STEEL	1
8	1/2" UNION TAIIL PIECE	ASTM B16	1	18	COTTER PIN	300 STAINLESS	1
9	BALL CHECK	302 STAINLESS	1	19	SPECIAL DRAIN FITTING	ASTM B16	1
10	PACKING NUTQ	ASTM B16	1	20	BALL VALVE 300 WSP	ASTM B61	1

UNITED BRASS WORKS, INC.

714 S. Main St. Randleman, N.C. 27317

Tel: 800-334-3035 Fax: 800-498-4696 www.ubw.com

Model 900Q 3/4” Quick Opening Valve
Set With Ball Checks

300 WSP @ 450 ° F Max
600 WOG
100% Pressure Tested
ASME Compliant per B31.1 and Section One, PG 60
Appendix A18 of ASME Boiler Code.
Complete Installation Instructions Are Included With Each Set
Contains Lead. Not For Use in Potable Water Systems

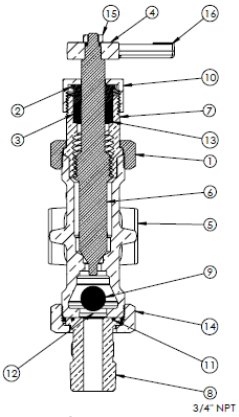

UPPER VALVE

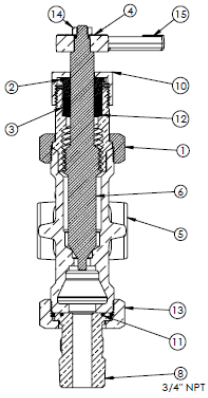

LOWER VALVE

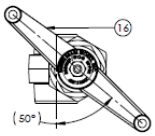

UPPER VALVE LEVER

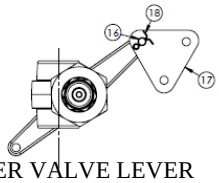

LOWER VALVE LEVER

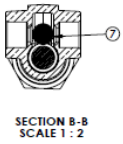

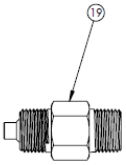

SPECIAL DRAIN FITTING

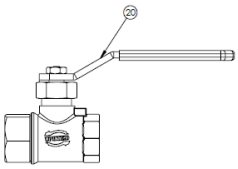

BALL VALVE 300 WSP

MATERIAL LIST

PART NO.	DESCRIPTION	MATERIAL	QUANTITY	PART NO.	DESCRIPTION	MATERIAL	QUANTITY
1	UNION NUT	ASTM B61	1	11	O-RING	TFE/P	1
2	PACKING GLAND	ASTM B16	1	12	PACKING WASHER	300 STAINLESS	1
3	PACKING	33 NAFG	1	13	UNION NUT	ASTM B61	1
4	MARKER DISC	300 STAINLESS	1	14	JAM NUT	ASTM B19	1
5	BODY	ASTM B61	1	15	TEE HANDLE	ASTM B62	1
6	STEM	ASTM B21	1	16	CLEVIS PIN	300 STAINLESS	1
7	BONNET	ASTM B61	1	17	EQUALIZE	CARBON STEEL	1
8	3/4" UNION TAIIL PIECE	ASTM B16	1	18	COTTER PIN	300 STAINLESS	1
9	BALL CHECK	302 STAINLESS	1	19	SPECIAL DRAIN FITTING	ASTM B16	1
10	PACKING NUTQ	ASTM B16	1	20	BALL VALVE 300 WSP	ASTM B61	1

UNITED BRASS WORKS, INC.
714 S. Main St. Randleman, N.C. 27317
Tel: 800-334-3035 Fax: 800-498-4696 www.ubw.com

Model 900S 1/2” Slow Opening Valve Set With Ball Checks

300 WSP @ 450 ° F Max
600 WOG
100% Pressure Tested
ASME Compliant per B31.1 and Section One, PG 60
Appendix A18 of ASME Boiler Code.
Complete Installation Instructions Are Included With Each Set
Contains Lead. Not For Use in Potable Water Systems

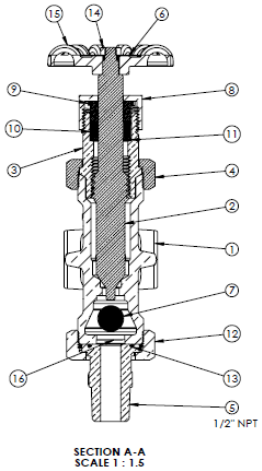

UPPER VALVE

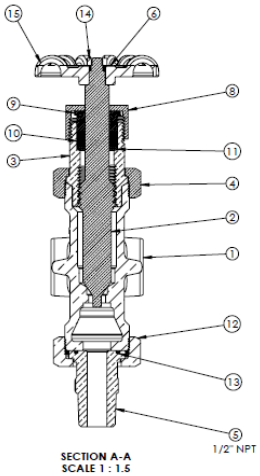

LOWER VALVE

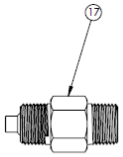
SPECIAL DRAIN FITTING

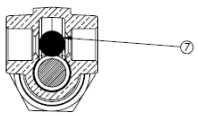
LOWER VALVE CROSS SECTION

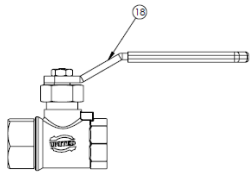
BALL VALVE 300 WSP

MATERIAL LIST							
PART NO.	DESCRIPTION	MATERIAL	QUANTITY	PART NO.	DESCRIPTION	MATERIAL	QUANTITY
1	BODY	ASTM B61	1	10	PACKING	33 NAFG	1
2	STEM	ASTM B21	1	11	PACKING WASHER	300 STAINLESS	1
3	BONNET	ASTM B16	1	12	UNION NUT	ASTM B61	1
4	UNION NUT	ASTM B61	1	13	O-RING	TFE/P	1
5	1/2" UNION TAIL PIECE	ASTM B16	1	14	JAM NUT	ASTM B19	1
6	MARKER DISC	300 STAINLESS	1	15	HAND WHEEL	ZINC	1
7	BALL CHECK	302 STAINLESS	1	16	RETAINING RING	300 STAINLESS	1
8	PACKING NUT	ASTM B16	1	17	SPECIAL FITTING	ASTM B16	1
9	PACKING GLAND	ASTM B16	1	18	BALL VALVE 300 WSP	ASTM B61	1

UNITED BRASS WORKS, INC.
714 S. Main St. Randleman, N.C. 27317
Tel: 800-334-3035 Fax: 800-498-4696 www.ubw.com

Model 900S 3/4” Slow Opening Valve Set With Ball Checks

300 WSP @ 450 ° F Max
600 WOG
100% Pressure Tested
ASME Compliant per B31.1 and Section One, PG 60
Appendix A18 of ASME Boiler Code.
Complete Installation Instructions Are Included With Each Set
Contains Lead. Not For Use in Potable Water Systems

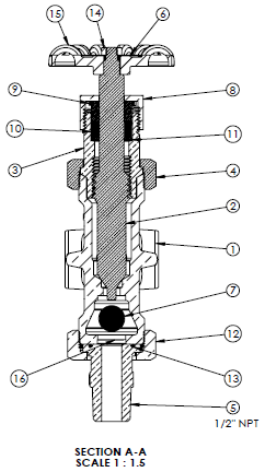

UPPER VALVE

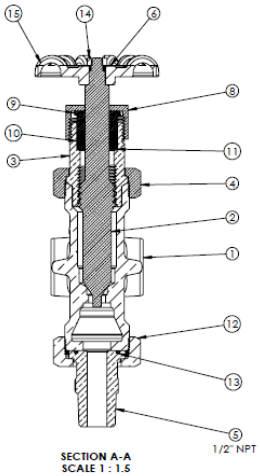

LOWER VALVE

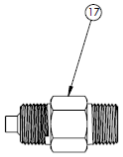
SPECIAL DRAIN FITTING

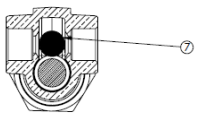
LOWER VALVE CROSS SECTION

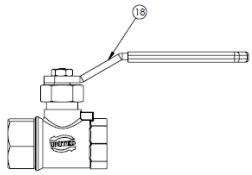
BALL VALVE 300 WSP

MATERIAL LIST							
PART NO.	DESCRIPTION	MATERIAL	QUANTITY	PART NO.	DESCRIPTION	MATERIAL	QUANTITY
1	BODY	ASTM B61	1	10	PACKING	33 NAFG	1
2	STEM	ASTM B21	1	11	PACKING WASHER	300 STAINLESS	1
3	BONNET	ASTM B16	1	12	UNION NUT	ASTM B61	1
4	UNION NUT	ASTM B61	1	13	O-RING	TFE/P	1
5	3/4" UNION TAIL PIECE	ASTM B16	1	14	JAM NUT	ASTM B19	1
6	MARKER DISC	300 STAINLESS	1	15	HAND WHEEL	ZINC	1
7	BALL CHECK	302 STAINLESS	1	16	RETAINING RING	300 STAINLESS	1
8	PACKING NUT	ASTM B16	1	17	SPECIAL FITTING	ASTM B16	1
9	PACKING GLAND	ASTM B16	1	18	BALL VALVE 300 WSP	ASTM B61	1

TERMS AND CONDITIONS OF SALE

1. United Brass Works, Inc. agrees to sell products pursuant to its standard terms and conditions, unless it agrees to other terms in writing signed by both parties. The printed provisions on the reverse of any customer Purchase Order or on any other form supplied unilaterally by any customer shall be deemed rejected by United Brass Works, Inc. and shall be void and of no effect.

2. Where shown, valves will be shipped in multiples of packaged quantities. Order quantities will be changed to coincide with multiples of packaged quantities.

3. All prices are listed net, FOB, Randleman, North Carolina with freight allowed in Bronze and/or Iron Valves of 750 lbs. or more to all points in the U.S. (excluding Alaska and Hawaii) and to the nearest port of embarkation for foreign shipments (including Alaska and Hawaii), on all orders and back orders United Brass' responsibility terminates upon receipt of a bill of lading by the carrier.

4. Minimum merchandise invoice amount shall be $100.00 per order. All orders received for merchandise that totals to less than $100.00 shall be invoiced at the minimum charge.

5. Prices are subject to change without notice and orders will be invoiced at price in effect at time of shipment.

6. Terms are thirty days net, provided credit is approved. Where no credit information is available, shipments will be made COD or sight draft Charge accounts are extended to businesses, institutions, and organizations only, not to individuals. To qualify for open account privileges, an account must be rated satisfactory in Dun & Bradstreet or supply names of three commercial vendors who have extended credit. Allow four weeks to establish account when references other than a satisfactory Dun & Bradstreet rating are furnished.

7. No material shall be accepted for credit or replacement without prior return authorization being obtained and an RMA number being issued for the material. All materials must be returned prepaid.

8. This warranty gives you specific legal rights, and you may also have other rights which vary from state to state. During the first ninety (90) days after date of delivery of this product to the original purchaser. United Brass Works, Inc., will remedy any defect or malfunction found therein. However, the original purchaser shall be responsible for all labor costs. United Brass Works, Inc., extends this limited 90-Day Warranty to the original purchaser of this product only, and not to any subsequent transferees.
   This warranty does not apply to conditions resulting from improper installation, inadequate maintenance, misuse, abuse, accident or alteration. This is the only warranty applicable to products manufactured by United Brass Works, Inc., and the Company neither assumes nor authorizes anyone to assume for it any other obligation or liability in connection with such products.
   ANY IMPLIED WARRANTIES OR MERCHANT-ABILITY OR FITNESS FOR A PARTICULAR PURPOSE SHALL BE LIMITED INDURATION TO THE PERIOD OF THE ABOVE 90-DAY WARRANTY. SOME STATES DO NOT ALLOW LIMITATIONS ON HOW LONG AN IMPLIED WARRANTY LASTS, SO THE ABOVE LIMITATION MAY NOT APPLY TO YOU.

   UNITED BRASS WORKS, INC., SHALL NOT BE LIABLE FOR COMMERCIAL CONSEQUENTIAL DAMAGES SUCH AS PROPERTY DAMAGES AND INCIDENTAL EXPENSES RESULTING FROM BREACH OF THIS WARRANTY. SOME STATES DO NOT ALLOW THE EXCLUSION OR LIMITATION OF INCIDENTAL OR CONSEQUENTIAL DAMAGES, SO THE ABOVE LIMITATION OR EXCLUSION MAY NOT APPLY TO YOU.

9. All United Brass merchandise may be returned for credit if unused and in new condition after receipt of prior authorization within 60 days of purchase. Merchandise will not be accepted for return beyond 60 days after purchase. (This does not apply to defective merchandise.) A 15% restocking charge will be levied unless United Brass Works was in error. **Please call for Return Material Authorization number before returning merchandise.**

10. There will be a 15% surcharge on all merchandise drop shipped unless the invoice amount exceeds $100.00.

11. All claims for short shipments must be made within 10 days of receipt of material. Claims made after 10 days of receipt will not be honored.

12. United Brass Works, Inc., reserves the right to ship orders by means we deem most expedient and least expensive unless your order contains specific instructions and provided these instructions do not entail additional expense for the company.

13. All cancellations must be in writing and any expense incurred processing your order prior to the cancellation shall be invoiced to you.

14. All telephone and telegraph orders must be confirmed in writing.

15. All orders taken by salesmen are subject to approval by home office.

16. United Brass Works, Inc., reserves the right to make partial shipment if such is necessary, unless order has specific instruction to the contrary.

17. All delivery dates are approximate and United Brass Works, Inc., is not responsible for failure to meet dates specified.